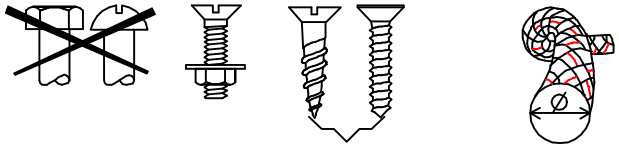

M8 5/16" | 8mm No.16 | Ø10–16mm 3/8" – 5/8"

Section 'AA'

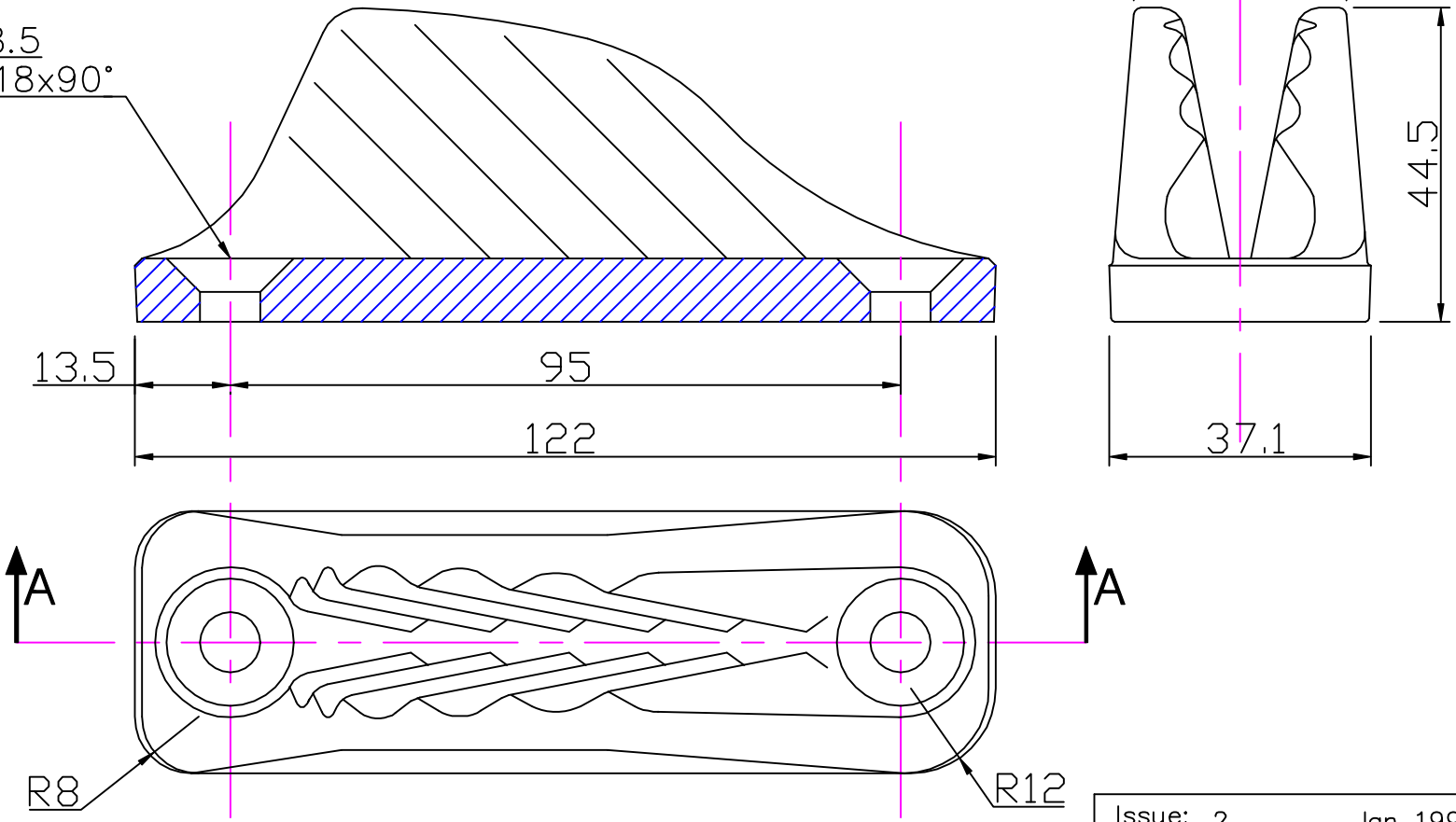

Clamcleat® Rope cleats

Clamcleats Limited
Watchmead
Welwyn Garden City
Hertfordshire AL7 1AP
England

Telephone +44 (0)1707 330101
Fax +44 (0)1707 321269
http://www.clamcleat-rope-cleats.com

Scale 1:1
All dimensions in mm.

Issue: 2. Jan 1999
ID205.dwg

Material:
Nylon

Installation Drawing for:–

CL205

Major