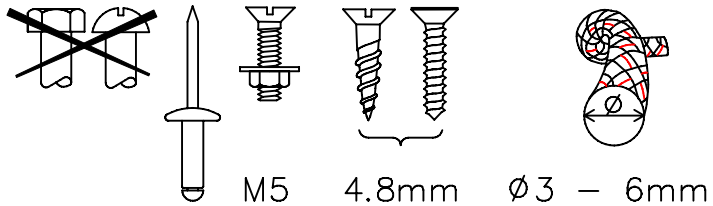

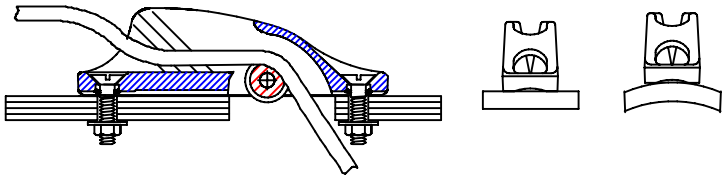

Notes: –
For marine applications, use a silicone sealant or a bedding compound to avoid electrolytic action between the cleat and metal fastenings.

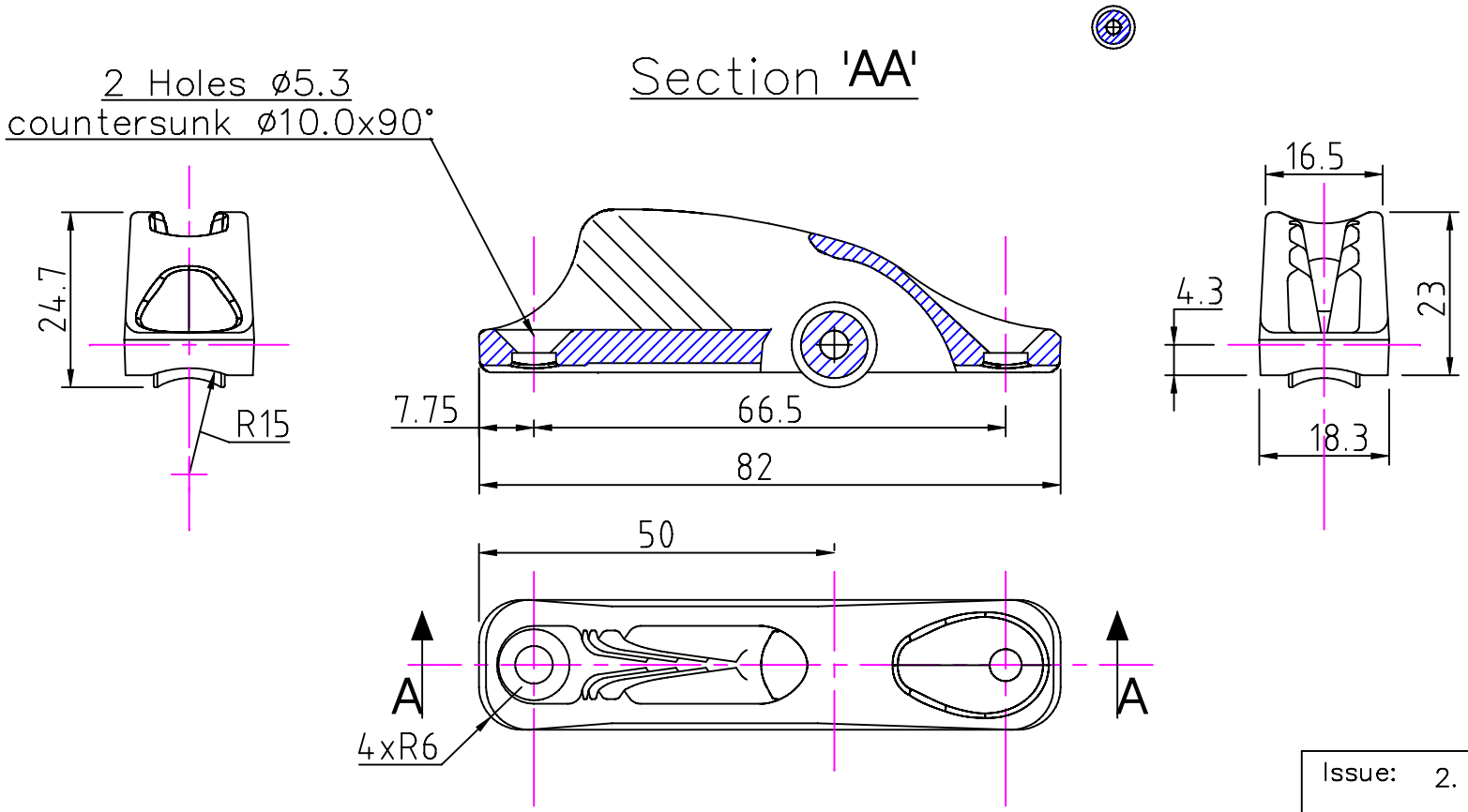

Clamcleat® Rope cleats
Clamcleats Limited
Watchmead
Welwyn Garden City
Hertfordshire AL7 1AP
England
Telephone +44 (0)1707 330101
Fax +44 (0)1707 321269
http://www.clamcleat-rope-cleats.com

Scale 1:1
All dimensions in mm.

Issue: 2. Nov 2006
ID230.dwg

Material:
Cleat – Diecast Aluminium
Roller – Reinforced Nylon

Installation Drawing for: –
CL230
Racing Junior Mk.1
with Roller