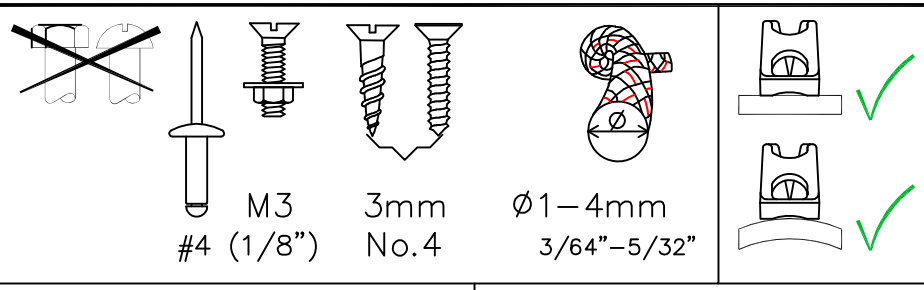

Standard rivet gun nozzles do not fit inside cleat.

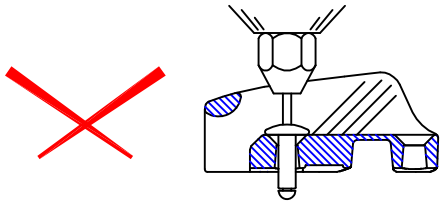

Use 2 or 3 nuts to extend nozzle.

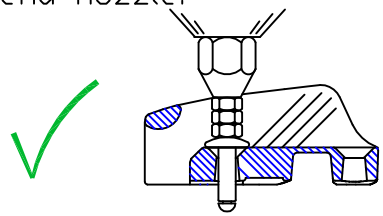

Extended nozzle is best
Consult rivet gun supplier.

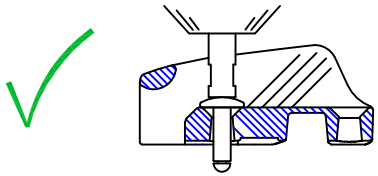

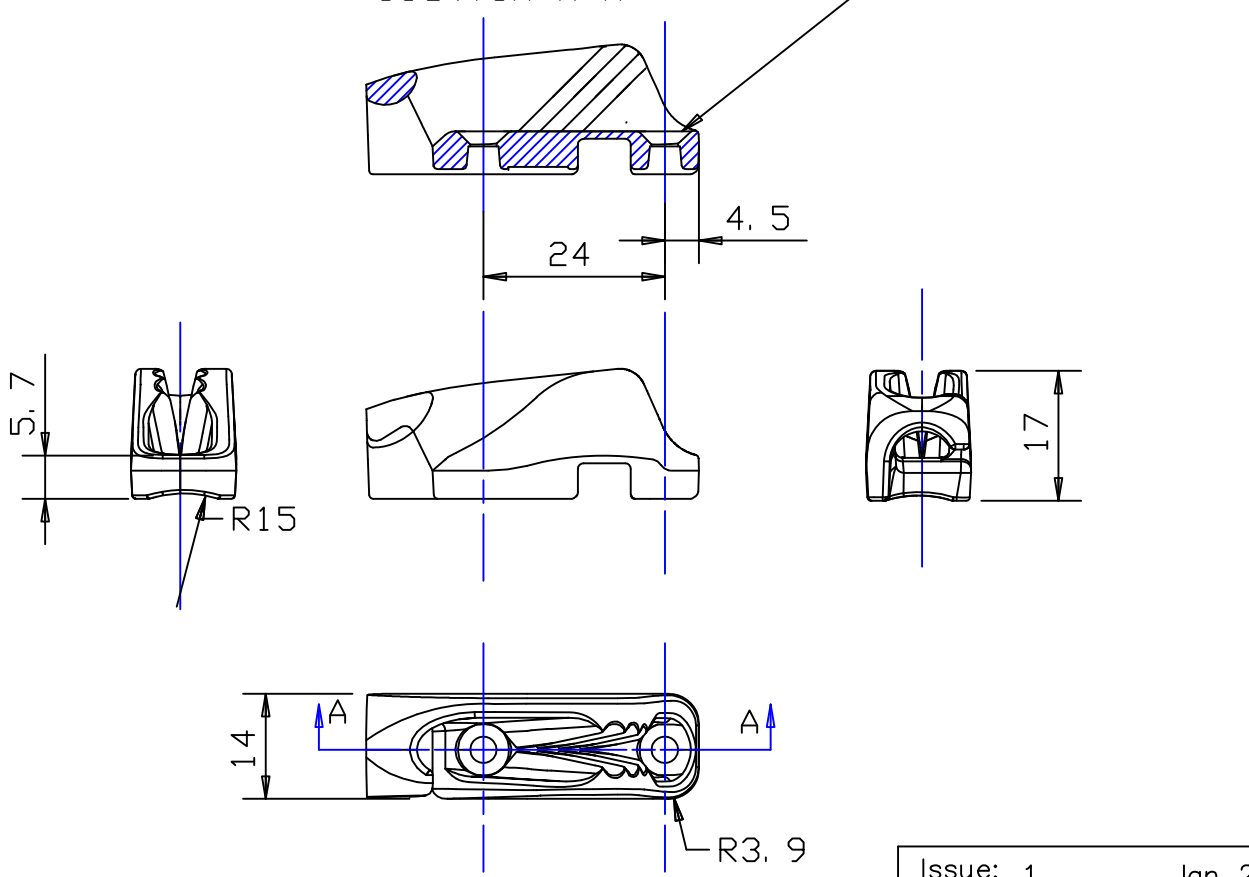

Clamcleat® Rope cleats
Clamcleats Limited
Watchmead
Welwyn Garden City
Hertfordshire AL7 1AP
England
Telephone +44 (0)1707 330101
Fax +44 (0)1707 321269
Email sales@clamcleat.com
www.clamcleat.com

Scale 1:1
All dimensions in mm.

Issue: 1 Jan 2009
ID278.dwg

Material:
Diecast Aluminium

Installation Drawing for:–

CL278

Racing Micros