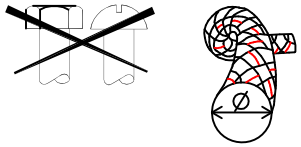

Ø4–6MM
5/32"–1/4"

Section 'A-A'

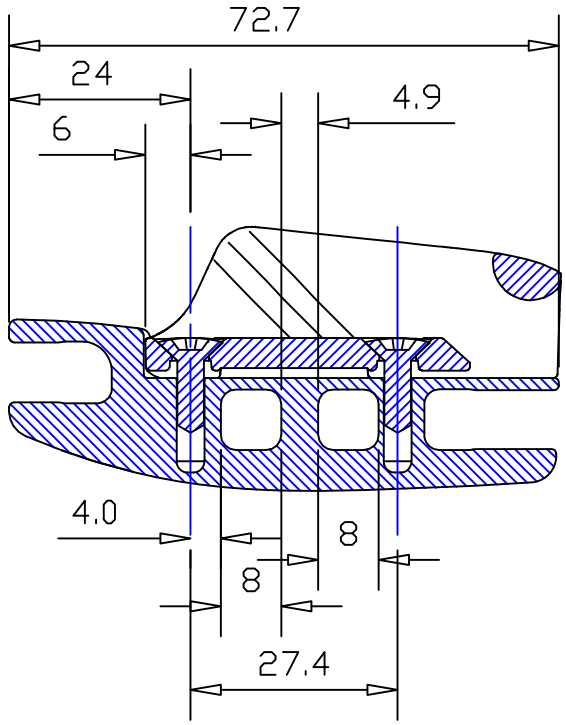

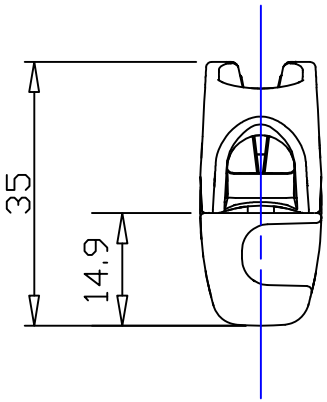

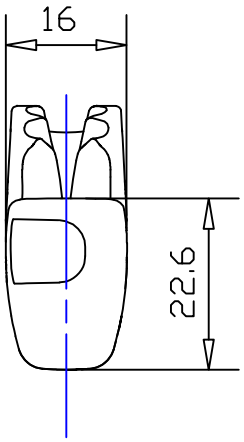

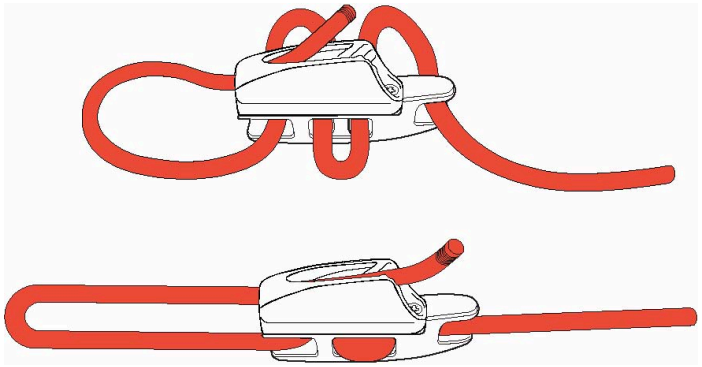

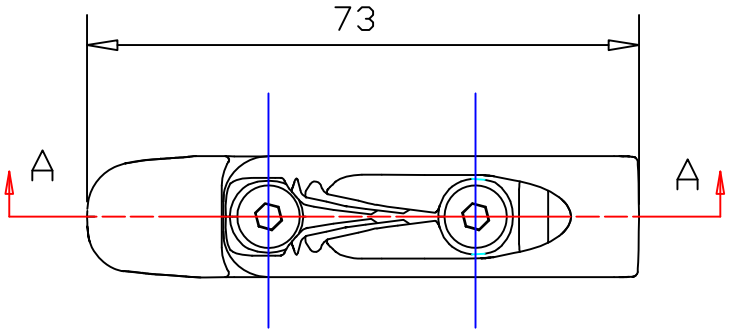

Clamcleat® Rope cleats

Clamcleats Limited
Watchmead
Welwyn Garden City
Hertfordshire AL7 1AP
England
Telephone +44 (0)1707 330101
Fax +44 (0)1707 321269
Email sales@clamcleat.com
www.clamcleat.com

Scale 1:1
All dimensions in mm.

Issue: 2 Jan 2010
ID826.dwg

Material:
Diecast Aluminium

Installation Drawing for:–

CL826-11

Aero Cleat