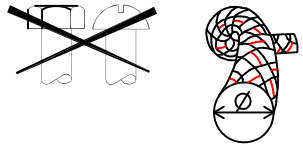

Ø4–6MM
5/32"–1/4"

Section 'A'A'

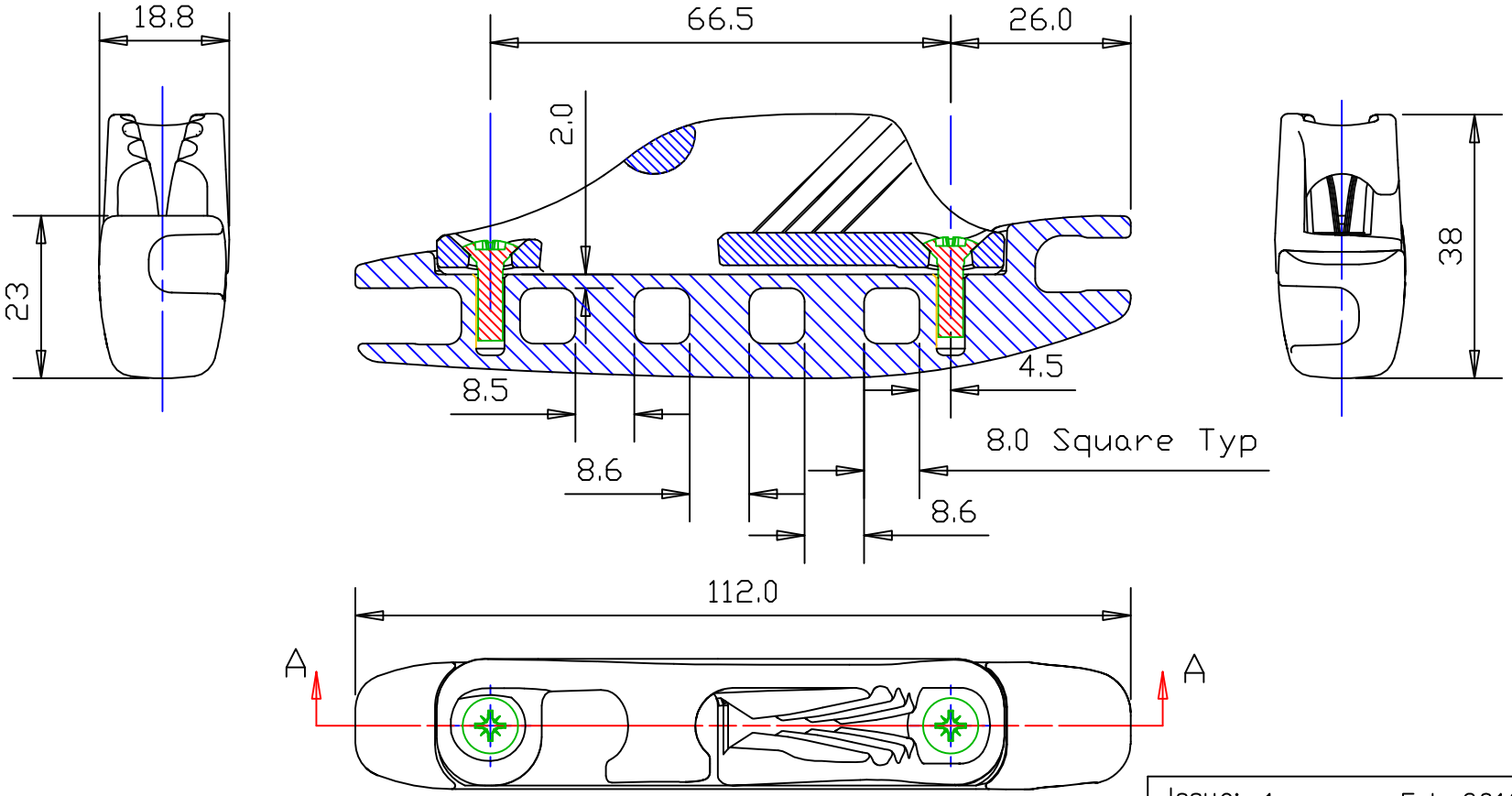

Clamcleat® Rope cleats
Clamcleats Limited
Watchmead
Welwyn Garden City
Hertfordshire AL7 1AP
England
Telephone +44 (0)1707 330101
Fax +44 (0)1707 321269
Email sales@clamcleat.com
www.clamcleat.com

Scale 1:1
All dimensions in mm.

Issue: 1 Feb 2010
ID827–18.dwg

Material:
Aluminium & Nylon

Installation Drawing for:–

CL827-18

Aero Cleat with CL218 Mk1