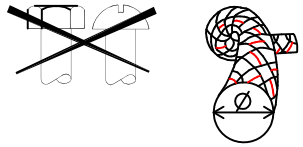

Ø3–4MM
1/8"–5/32"

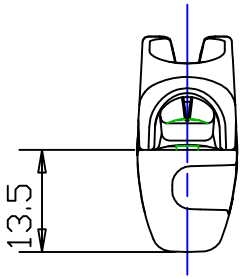

Section 'A-A'

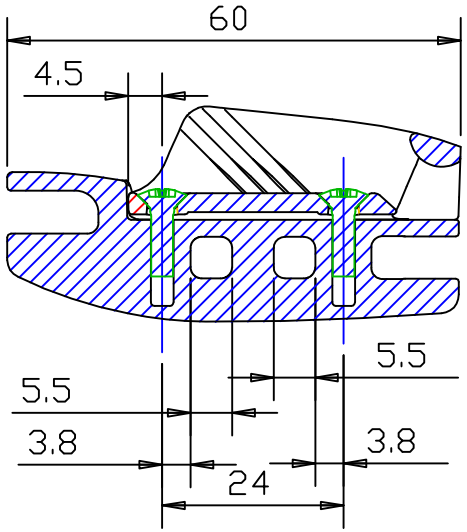

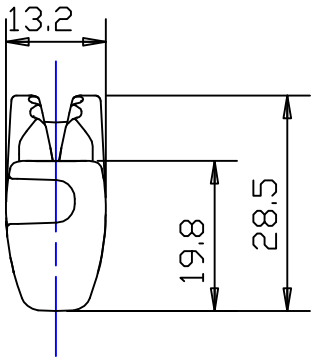

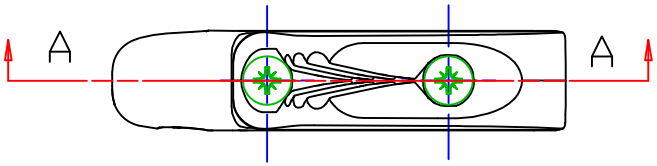

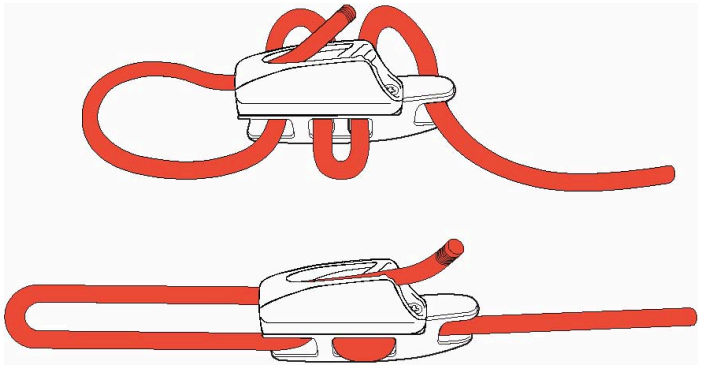

Clamcleat® Rope cleats
Clamcleats Limited
Watchmead
Welwyn Garden City
Hertfordshire AL7 1AP
England
Telephone +44 (0)1707 330101
Fax +44 (0)1707 321269
Email sales@clamcleat.com
www.clamcleat.com

Scale 1:1
All dimensions in mm.

Issue: 1 Jan 2010
ID828.dwg

Material:
Aluminium & Nylon

Installation Drawing for:–

CL828-68

Aero Cleat