Half Section 'BB'

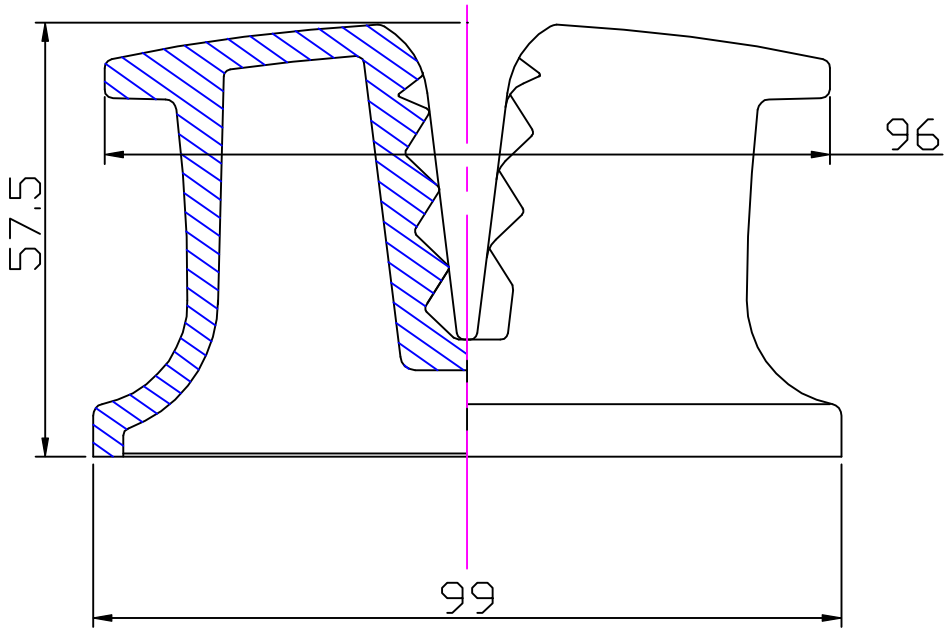

Section 'AA'

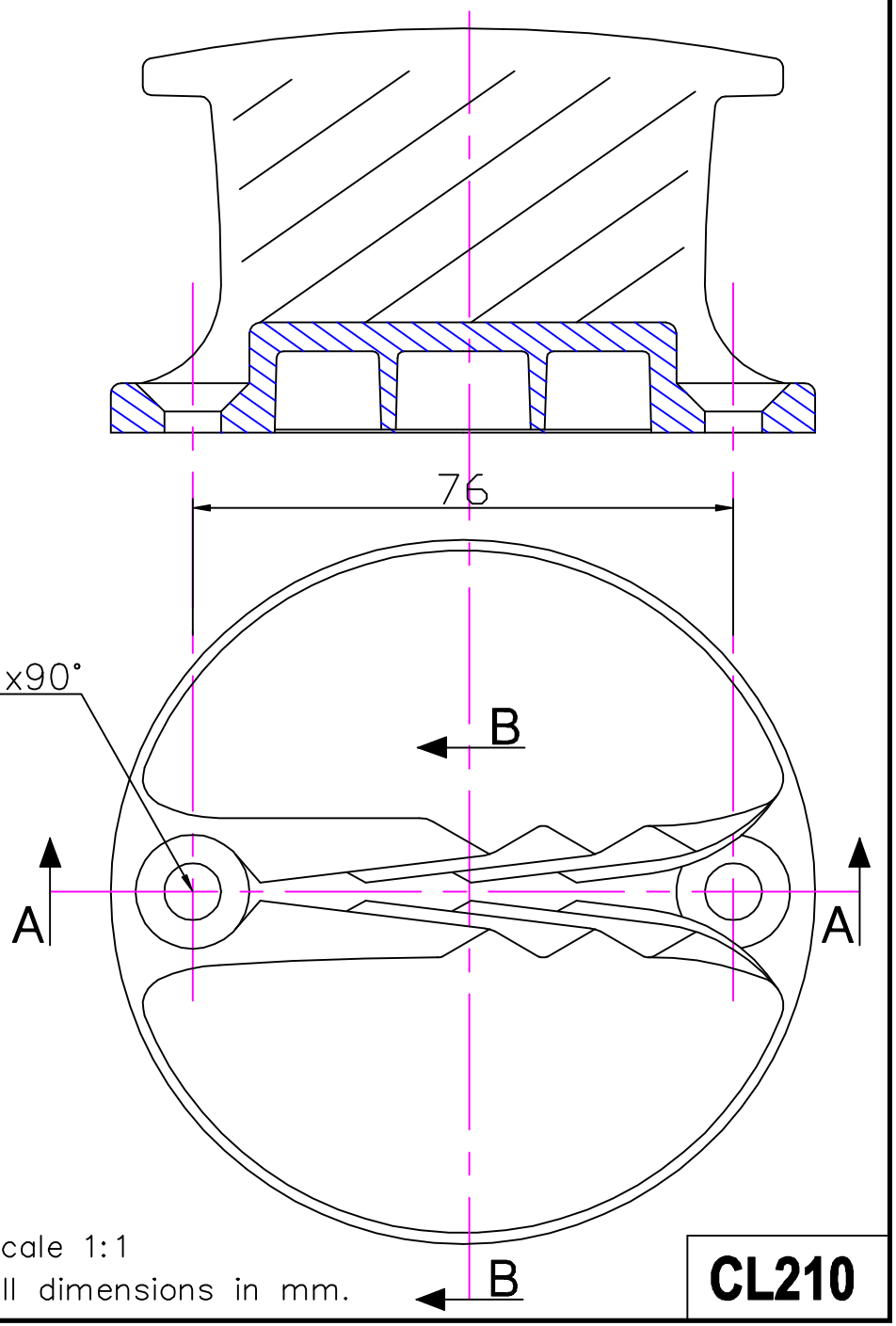

Issue: 1. Dec 2000 ID210.dwg		
Material: Nylon		
Installation Drawing for: – **CL210** Clam Bollard Major	ø10–16mm 3/8" – 5/8"	M8 5/16"

Clamcleat® Rope cleats

Clamcleats Limited
Watchmead
Welwyn Garden City
Hertfordshire AL7 1AP
England

Telephone +44 (0)1707 330101
Fax +44 (0)1707 321269
http://www.clamcleat-rope-cleats.com

Scale 1:1
All dimensions in mm.

CL210