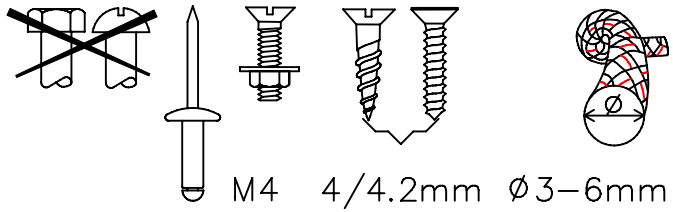

Notes: –
For marine applications, use a silicone sealant or a bedding compound to avoid electrolytic action between the cleat and metal fastenings.

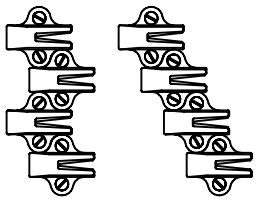

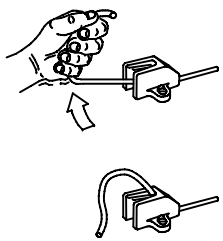

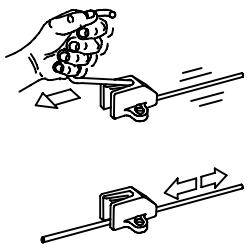

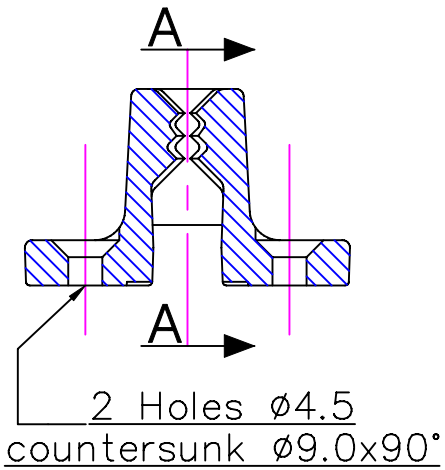

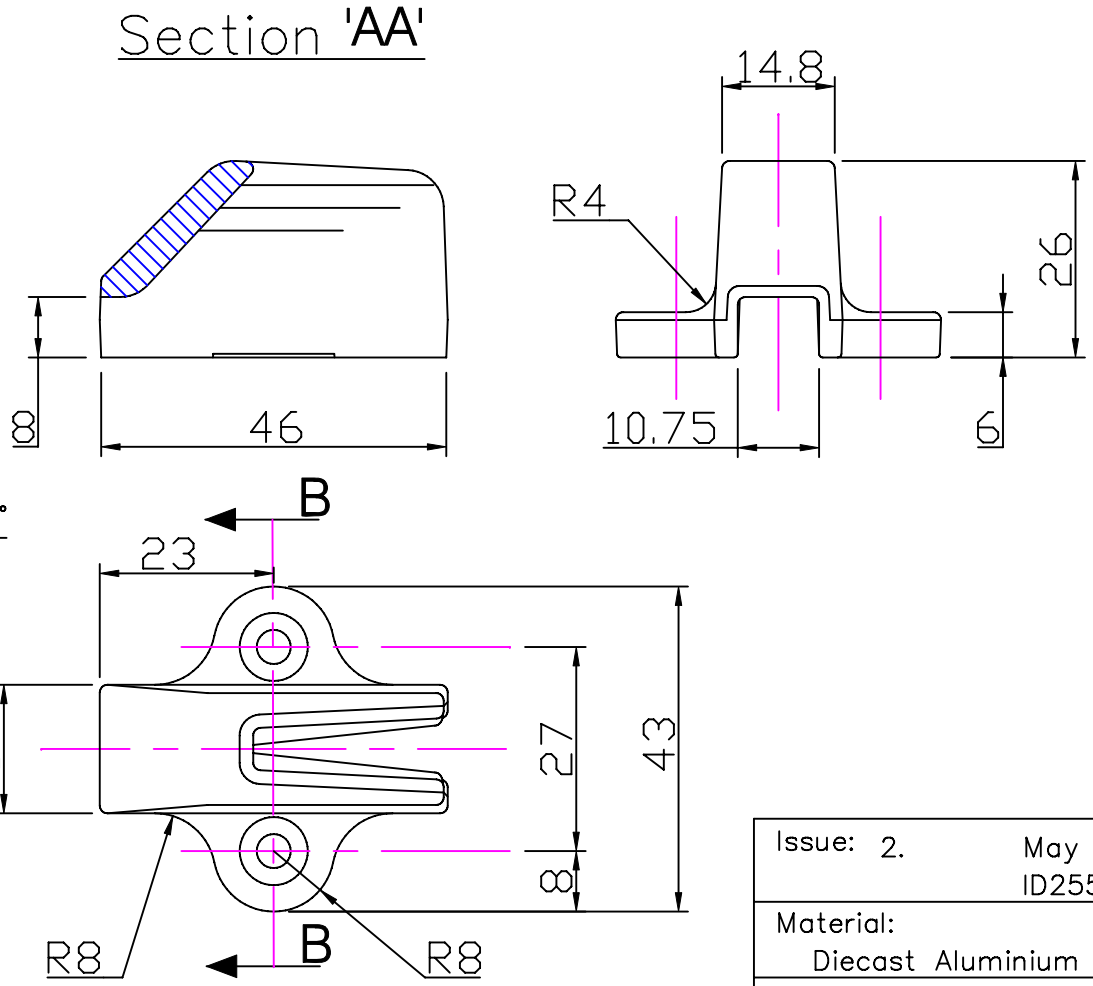

Clamcleat® Rope cleats
Clamcleats Limited
Watchmead
Welwyn Garden City
Hertfordshire AL7 1AP
England
Telephone +44 (0)1707 330101
Fax +44 (0)1707 321269
http://www.clamcleat-rope-cleats.com

Scale 1:1
All dimensions in mm.

Issue: 2. May 2006
ID255.dwg

Material:
Diecast Aluminium

Installation Drawing for: –

CL255

Omega