Ø 2 – 5mm
5/64" – 3/16"

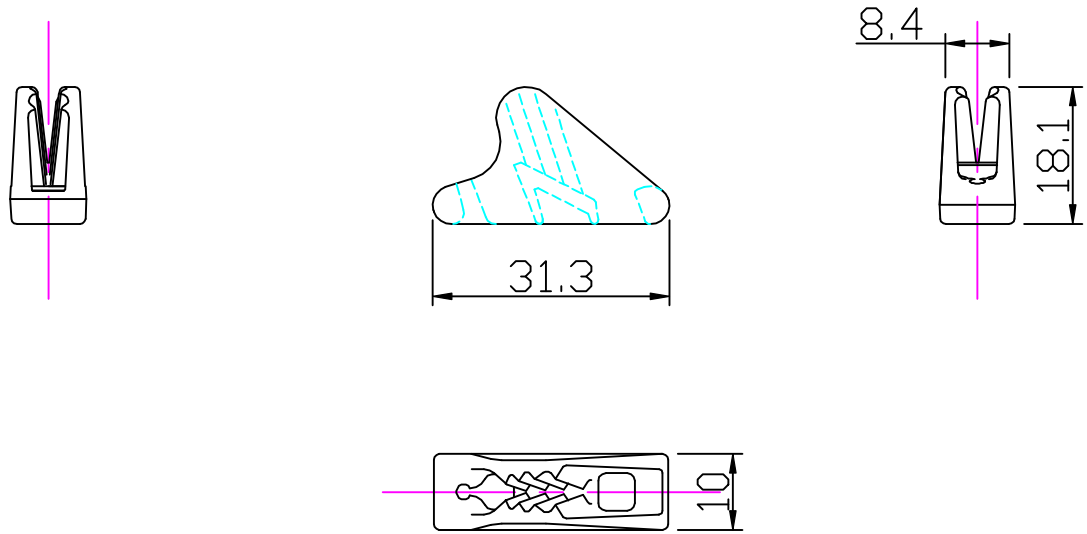

Rigging

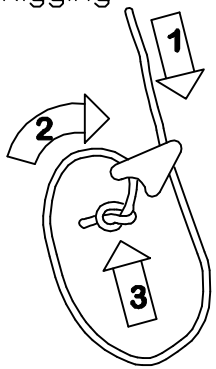

Tension

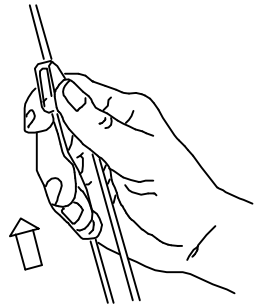

Release

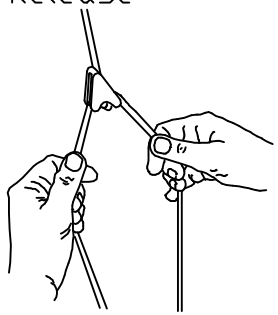

Clamcleat® Rope cleats

Clamcleats Limited
Watchmead
Welwyn Garden City
Hertfordshire AL7 1AP
England

Telephone +44 (0)1707 330101
Fax +44 (0)1707 321269
http://www.clamcleat-rope-cleats.com

Scale 1:1
All dimensions in mm.

Issue: 2. Mar 1999
ID260.dwg

Material:
Nylon

Installation Drawing for:–

CL260

Line–Lok(TM)