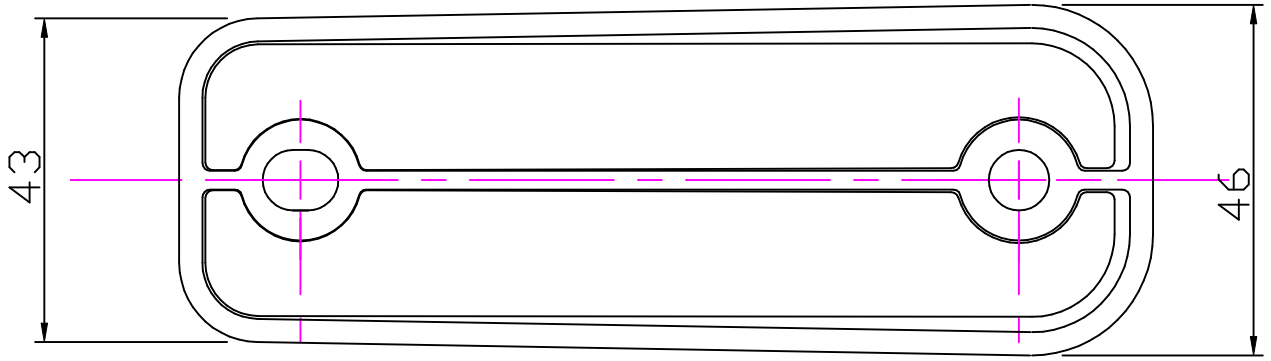

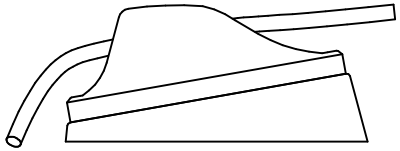

Application

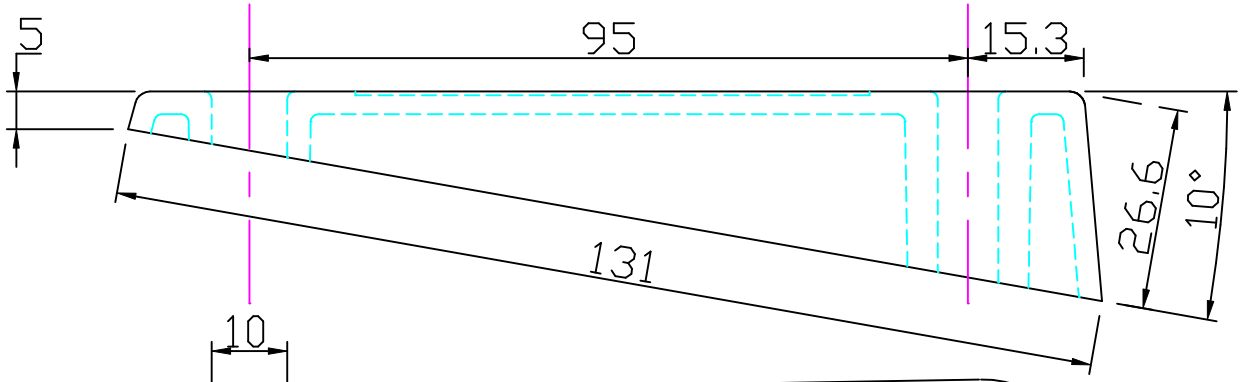

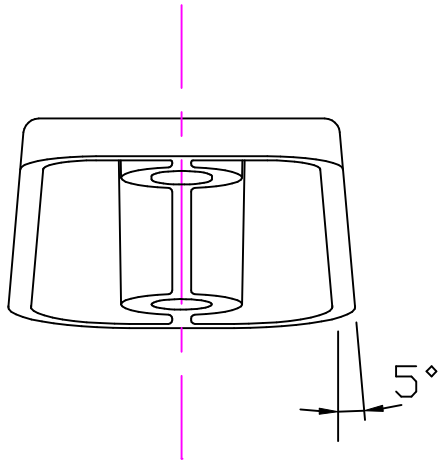

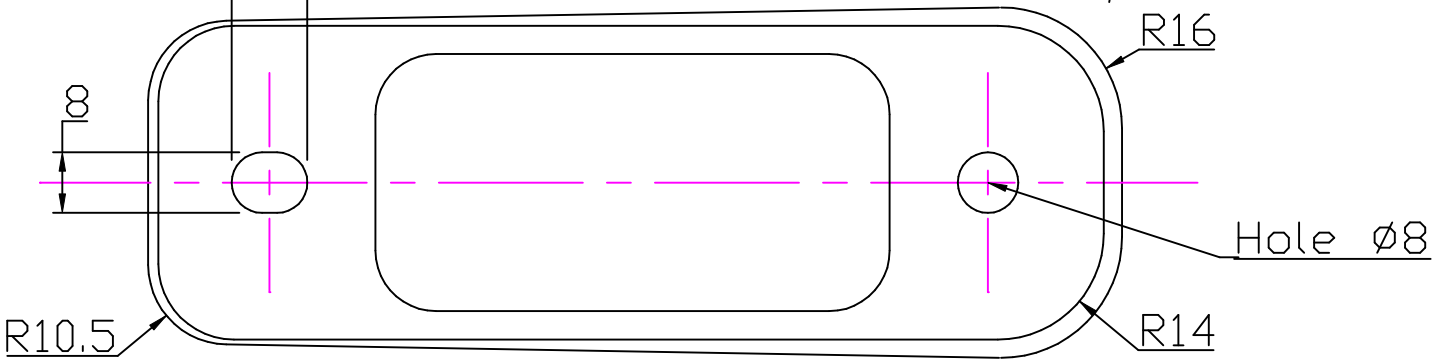

Clamcleat® Rope cleats

Clamcleats Limited
Watchmead
Welwyn Garden City
Hertfordshire AL7 1AP
England

Telephone +44 (0)1707 330101
Fax +44 (0)1707 321269
http://www.clamcleat-rope-cleats.com

Scale 1:1
All dimensions in mm.

Issue: 2. May 2002
ID805.dwg

Material:
Polypropylene

Installation Drawing for:–

CL805

Tapered Pad for CL205, CL220, CL239 & CL240