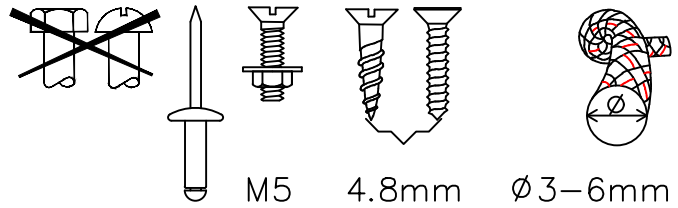

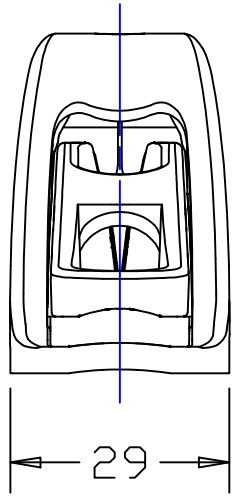

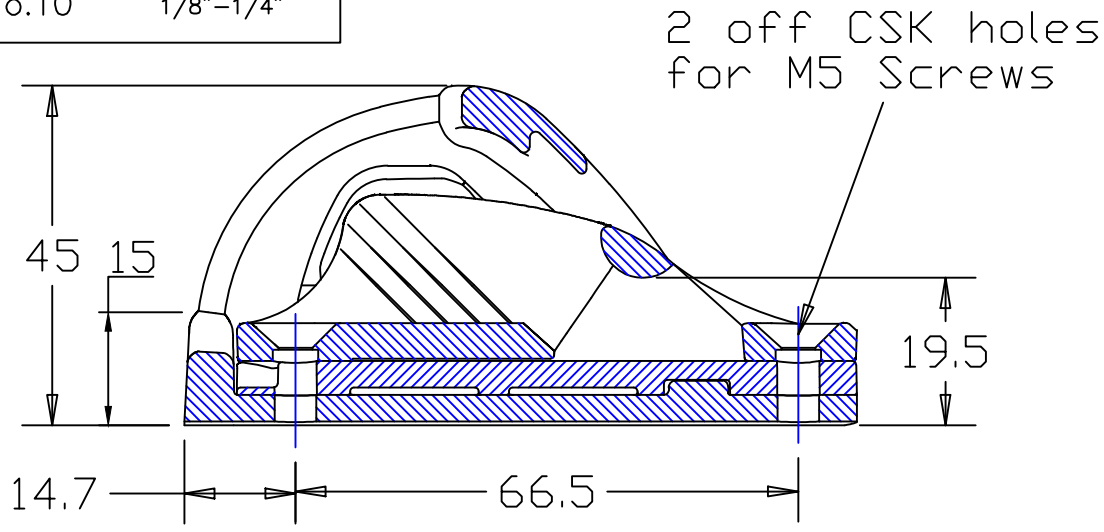

Section A-A

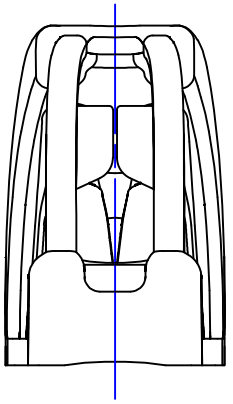

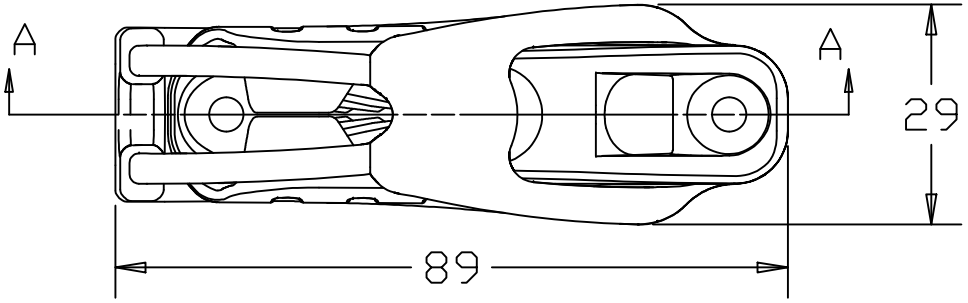

Clamcleat® Rope cleats

Clamcleats Limited
Watchmead
Welwyn Garden City
Hertfordshire AL7 1AP
England

Telephone +44 (0)1707 330101

www.clamcleat.com

Scale 1:1
All dimensions in mm.

Issue: 2 Mar 2021
ID833CKC.dwg

Material:
Stainless Steel, Nylon, Aly

Installation Drawing for:–

CL833CKC

Cleat, Keeper & Cage