All information is copyright of allen ©

# A2020Ti3HL

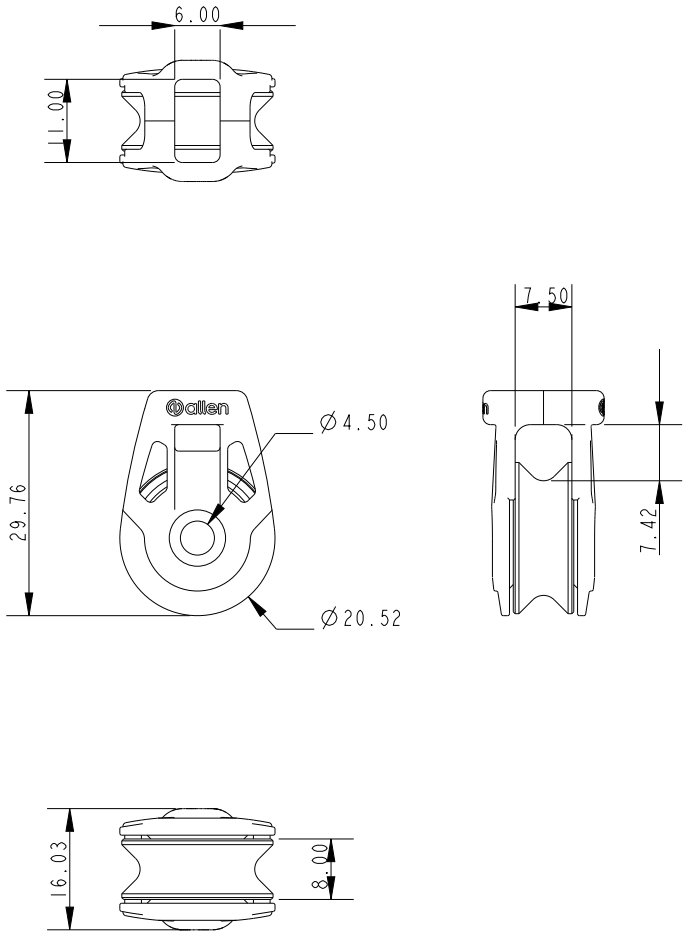

SCALE 2:1

| Specification | | | | |
|---|---|---|---|---|
| Length mm | Line Diameter mm | Breaking Load kg | MWL kg | Weight g |
| 29 | 6 | 540 | 250 | 14 |

**DIMENSIONS FOR REFERENCE ONLY**

allenbrothers.co.uk
+44(0)1621 772477

| Title | Description |
|---|---|
| A2020TI3HL-REF | Single Tii-On HL |