All information is copyright of allen ©

A2030HLF-873

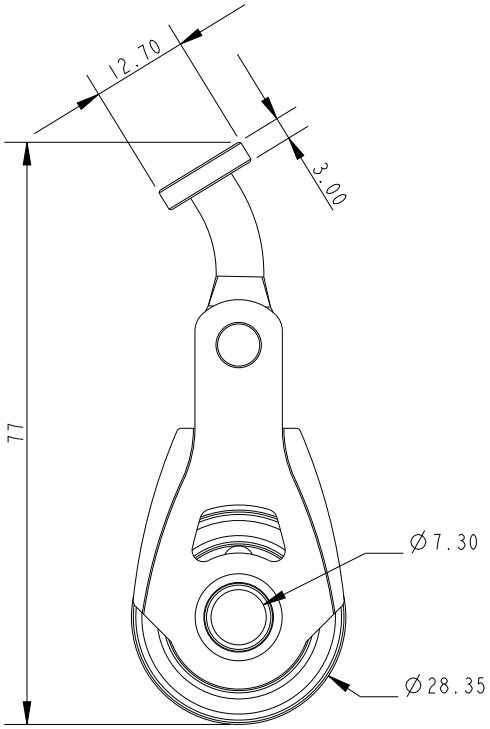

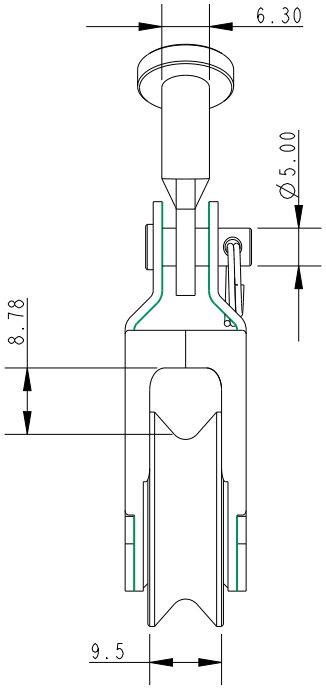

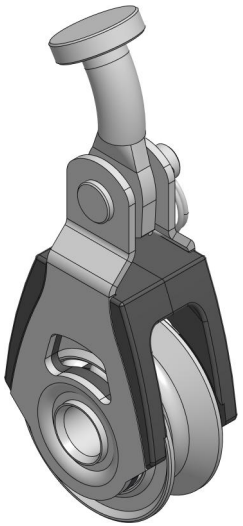

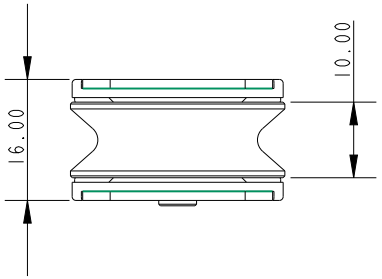

Specification						
Sheave Diameter mm	Length mm	Max Line Diameter mm	Breaking Load kg	Max Working Load kg	Weight g	Beraing Detail
28	77	8	750	300	52	Stainless Steel Ball

DIMENSIONS FOR REFERENCE ONLY

allenbrothers.co.uk
+44(0)1621 772477

Title	Description
A2030HLF-873-REF	High Load Dynamic Fork with SA.873