All information is copyright of allen ©

A2040TiiHL

SCALE 2:1

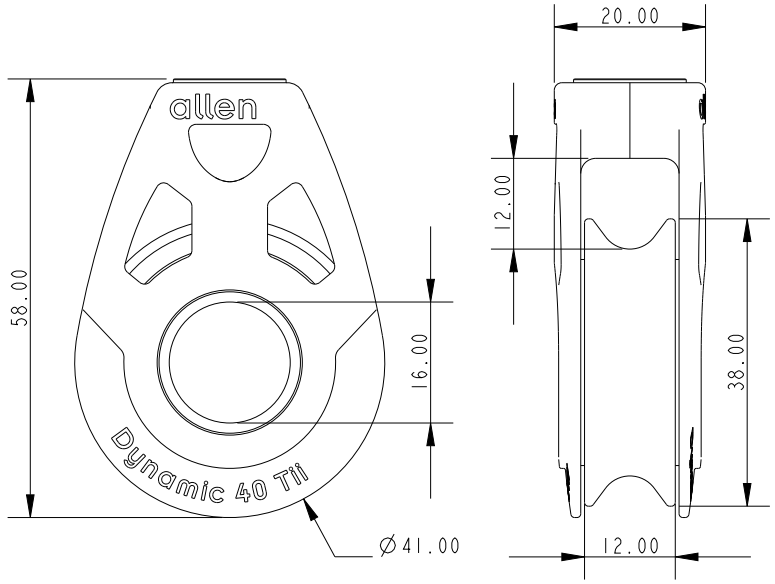

Specification				
Length mm	Line Diameter mm	Breaking Load kg	MWL kg	Weight g
58.00	10	800	360	55.6

DIMENSIONS FOR REFERENCE ONLY

allenbrothers.co.uk
+44(0)1621 772477

Title	Description
A2040TIIHL-REF	40mm High Load Tie on Block