All information is copyright of allen ©

A.396

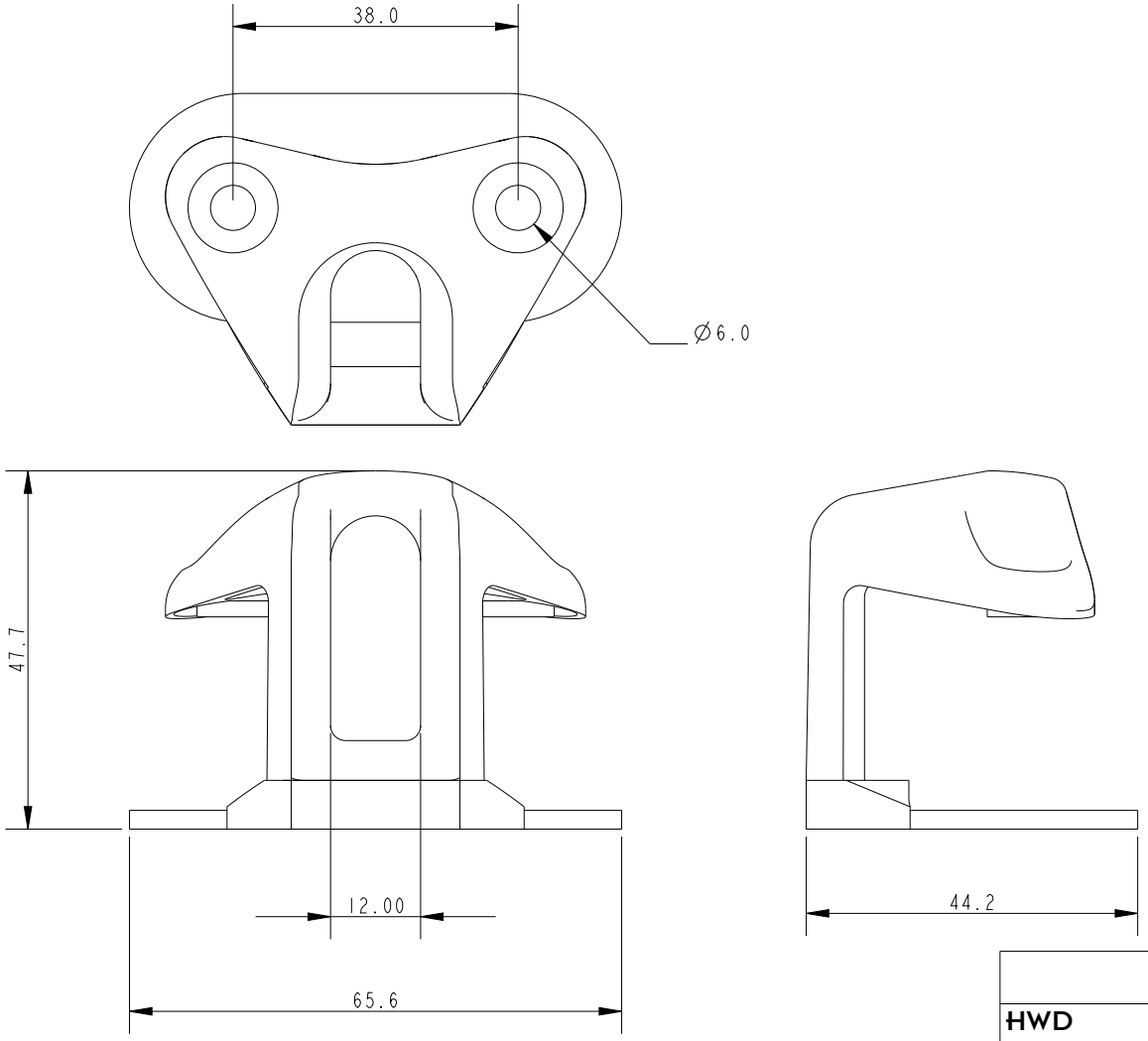

Specification				
HWD mm	Fixing Hole Pitch mm	Fixing Hole Size mm	Use With	Weight g
48x66x44	38	M5/UNC No. 10	A.676/A..76	29

DIMENSIONS FOR REFERENCE ONLY

allenbrothers.co.uk
+44(0)1621 772477

Title	Description
A-396-REF	Pro-Lead Medium