All information is copyright of allen ©

# A.497

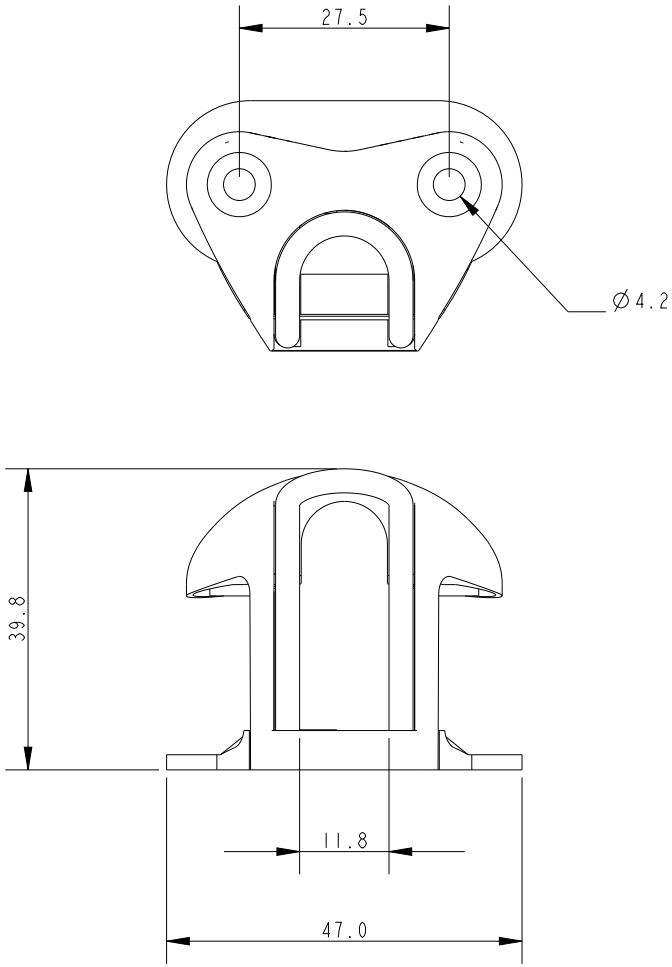

| Specification | | | | |
|---|---|---|---|---|
| HWD mm | Fixing Hole Pitch mm | Fixing Hole Size mm | Use With | Weight g |
| 40x47x33 | 27.5 | M4/UNC No. 8 | A.677/A..77 | 20 |

**DIMENSIONS FOR REFERENCE ONLY**

allenbrothers.co.uk
+44(0)1621 772477

| Title | Description |
|---|---|
| A-497-REF | Mega Pro-Lead Small |