All information is copyright of allen ©

A.597

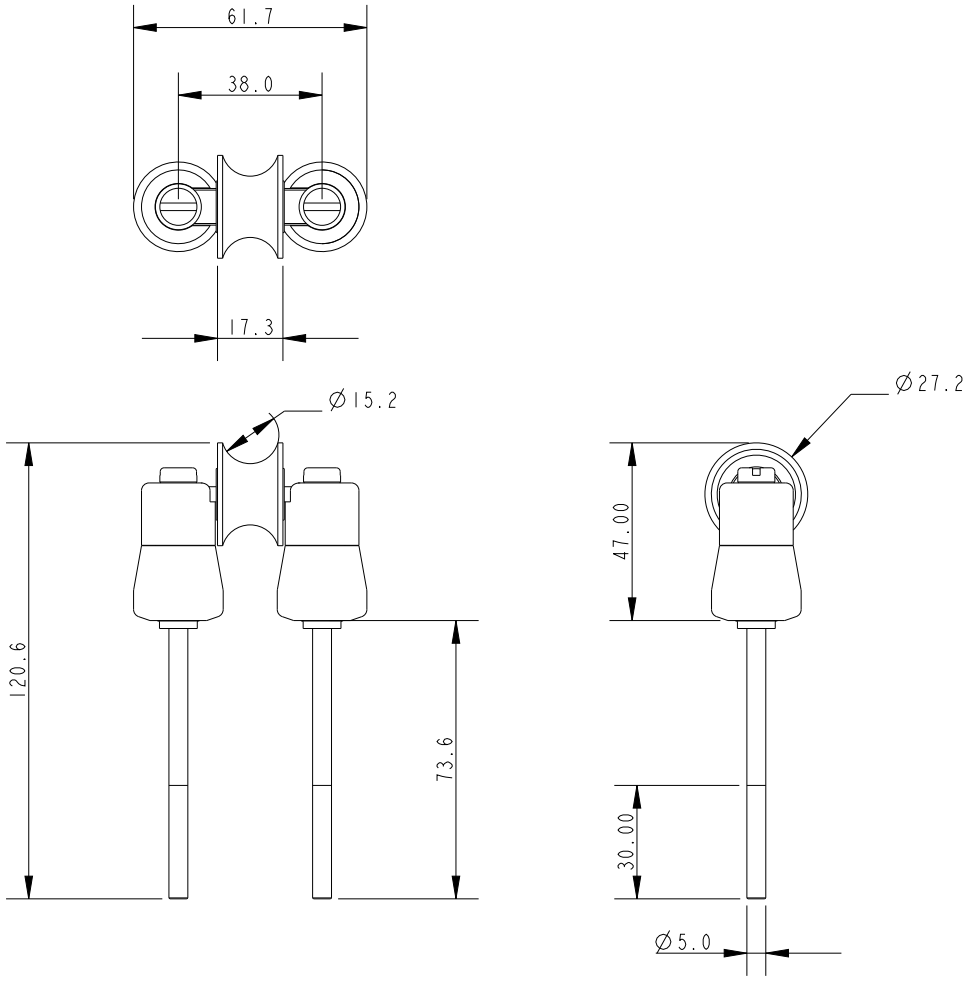

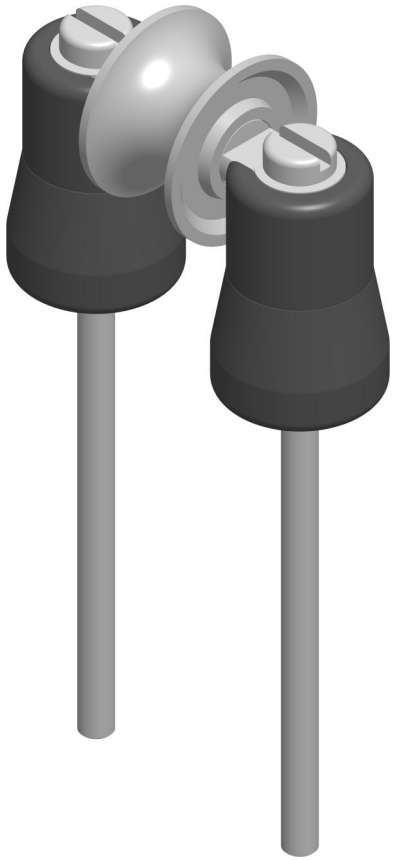

Specification				
HWD mm	Fixing Rod Pitch mm	Fixing Rod Size mm	Use With	Weight g
47x62x27	38	M5	A.676/A..76	-

DIMENSIONS FOR REFERENCE ONLY

allenbrothers.co.uk
+44(0)1621 772477

Title	Description
A-597-REF	Finn Roller Failread