All information is copyright of allen ©

A.677-497

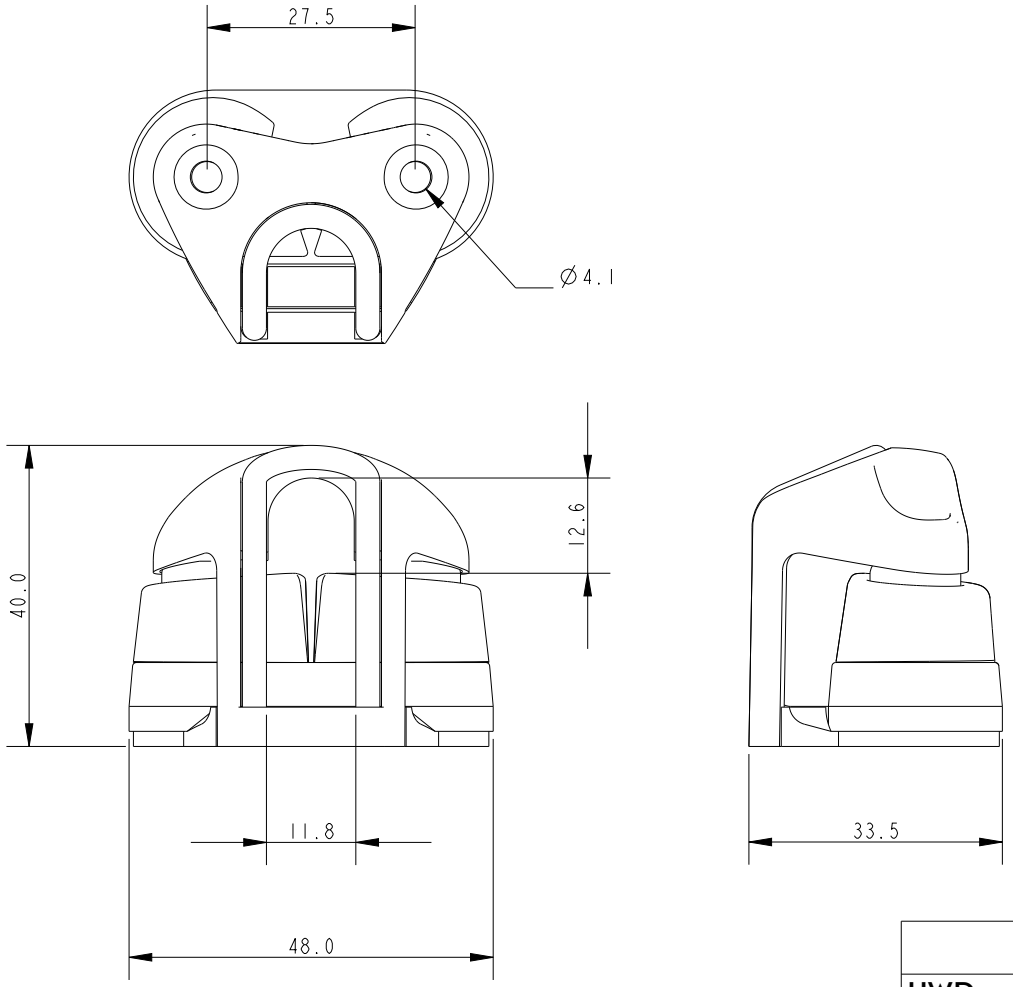

Specification					
HWD mm	Line Diameter mm	Fixing Hole Pitch mm	Fixing Hole Size mm	MWL kg	Weight g
40x48x34	2 - 6	27.5	M4/UNC No. 8	100	45

DIMENSIONS FOR REFERENCE ONLY

allenbrothers.co.uk
+44(0)1621 772477

Title	Description
A-677-497-REF	Small Composite Cleat and Fairlead