All information is copyright of allen ©

A.793

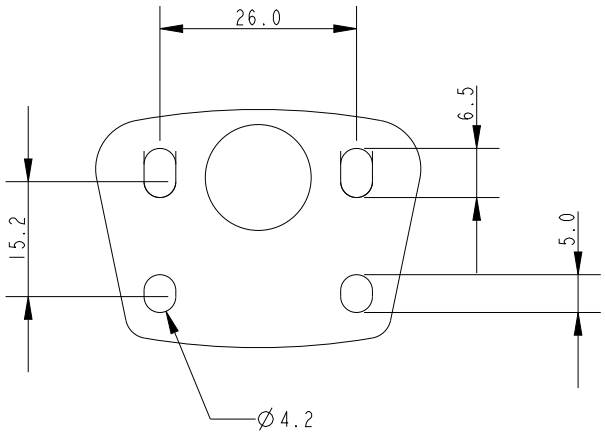

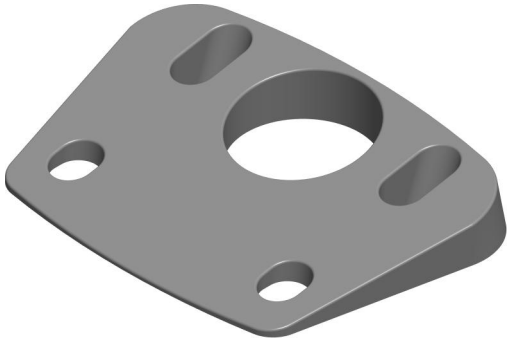

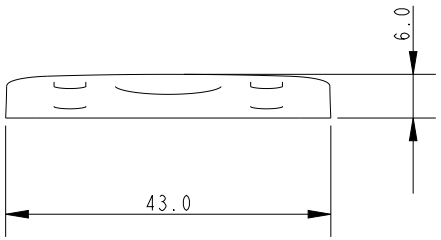

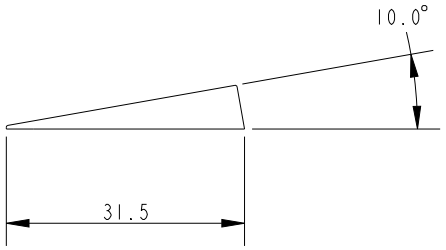

Specification				
HWD mm	Fixing Hole Centres mm	Fixing Hole Size	Use With	Weight g
6x43x32	26	M4/UNC No. 8	A4476	3

DIMENSIONS FOR REFERENCE ONLY

allenbrothers.co.uk
+44(0)1621 772477

Title	Description
A-793-REF	Cam Cleat Wedge