All information is copyright of allen ©

# A1396

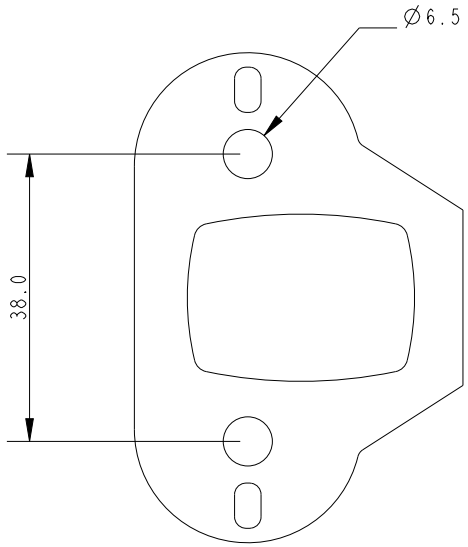


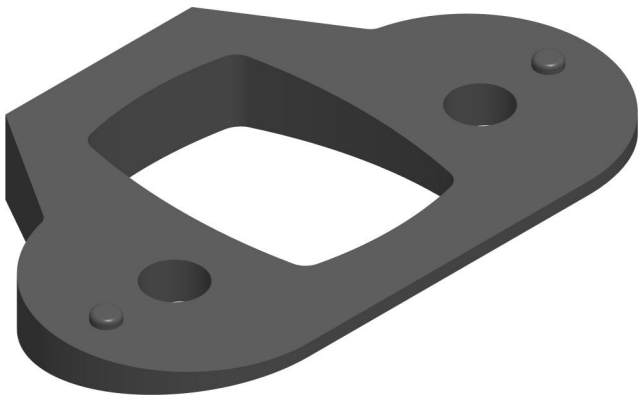

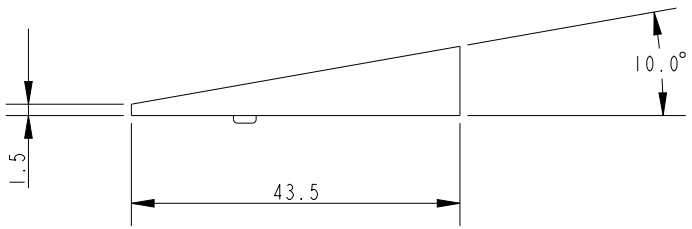


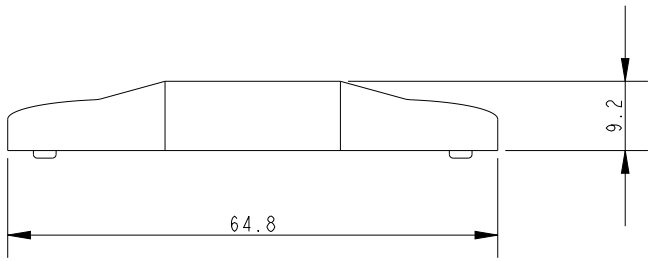


| Specification | | | |
|---|---|---|---|
| HWD mm | Fixing Hole Pitch mm | Use With | Weight g |
| 9x65x44 | 38 | A.676/A..76 | 9 |

**DIMENSIONS FOR REFERENCE ONLY**

allenbrothers.co.uk
+44(0)1621 772477

| Title | Description |
|---|---|
| A1396-REF | Pro-Lead Wedge Medium |