All information is copyright of allen ©

A1397

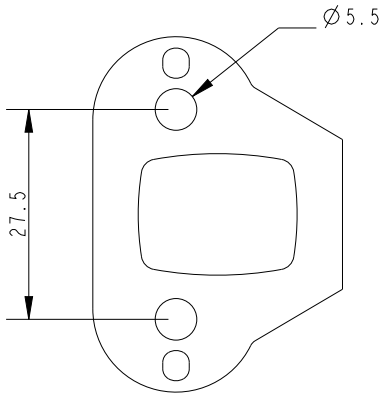

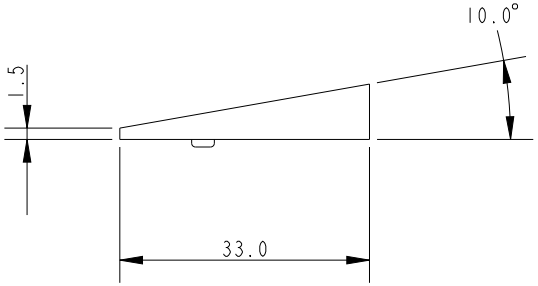

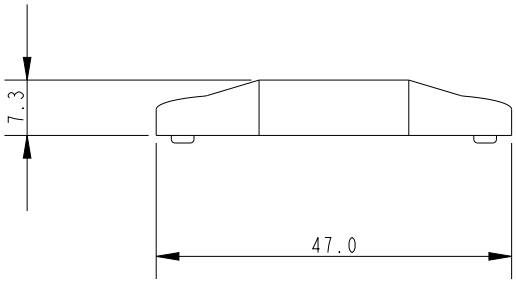

Specification			
HWD mm	Fixing Hole Pitch mm	Use With	Weight g
7x47x33	27.5	A.677/A..77	5

DIMENSIONS FOR REFERENCE ONLY

allenbrothers.co.uk
+44(0)1621 772477

Title	Description
A1397-REF	Pro-Lead Wedge Small