All information is copyright of allen ©

A4665-LOW

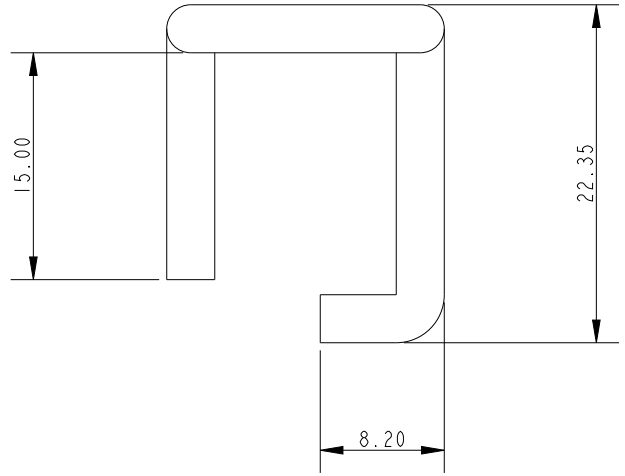

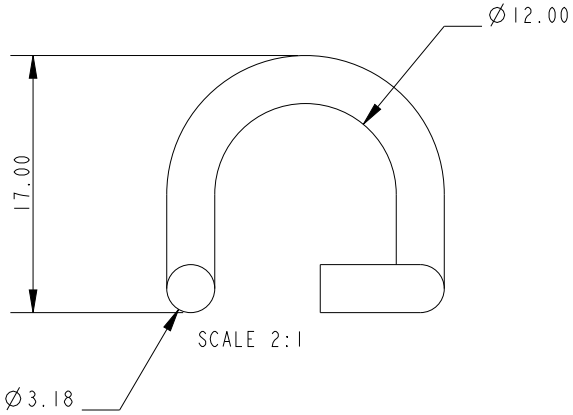

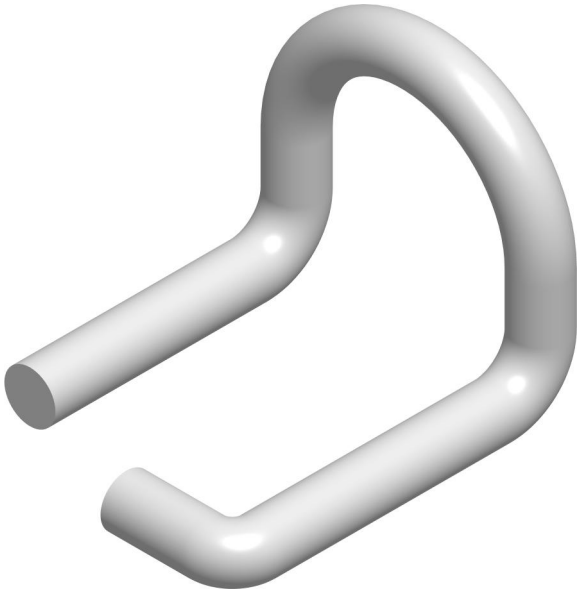

SCALE 3:1

Use with:
A.677 / A..77

DIMENSIONS FOR REFERENCE ONLY

allenbrothers.co.uk
+44(0)1621 772477

Title	Description
A4665-LOW-REF	Low Under Fairlead