All information is copyright of allen ©

A4772SDR-KIT

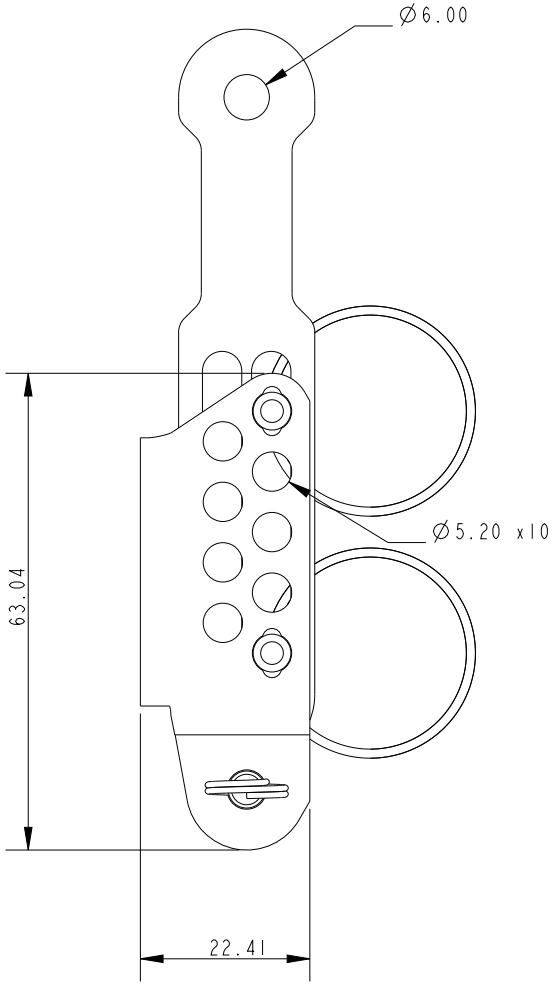

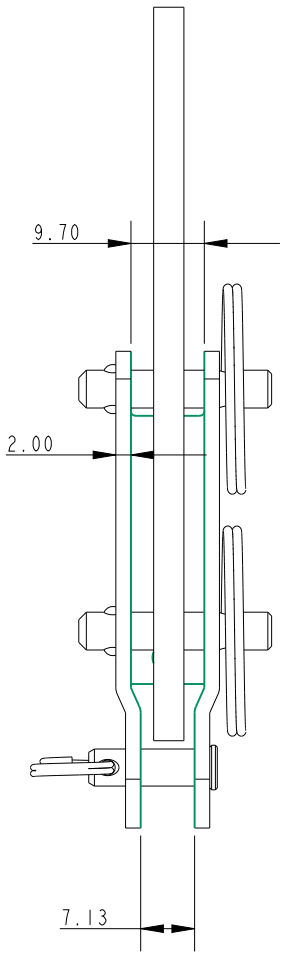

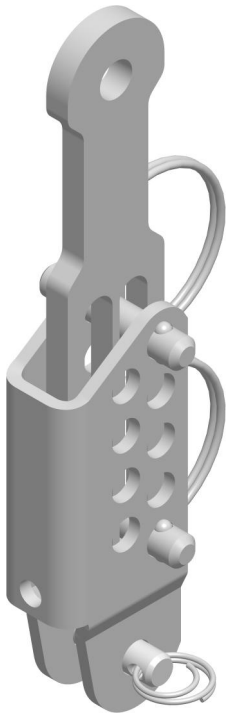

Specification				
Pin Diameter mm	Adjustment Range mm	Increments mm	Internal Width mm	Weight g
5	32 + 43dr	4	9.5	40

DIMENSIONS FOR REFERENCE ONLY

allenbrothers.co.uk
+44(0)1621 772477

Title	Description
A4772SDR-KIT-REF	Short Heavy Duty Vernier Adjuster With De Raker