All information is copyright of allen ©

A4413

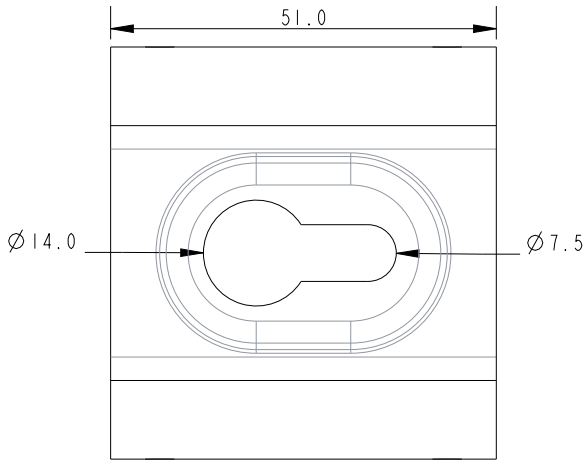

SCALE 1:1

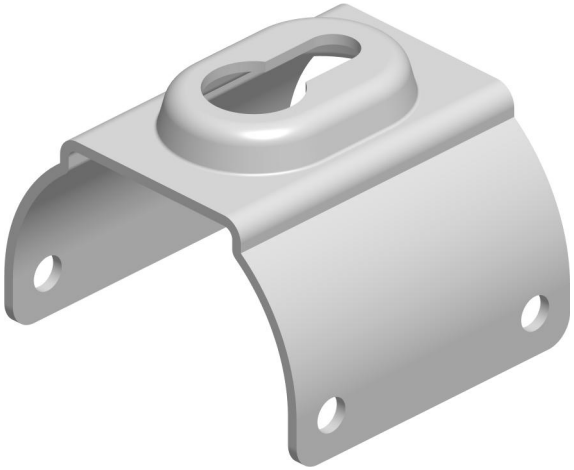

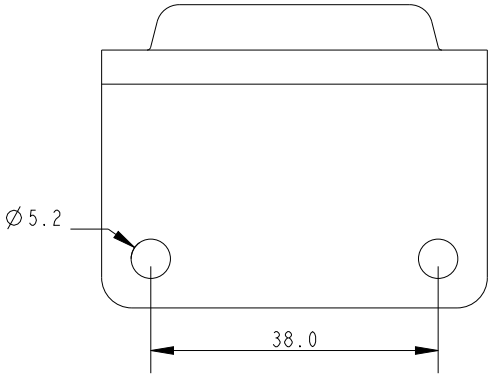

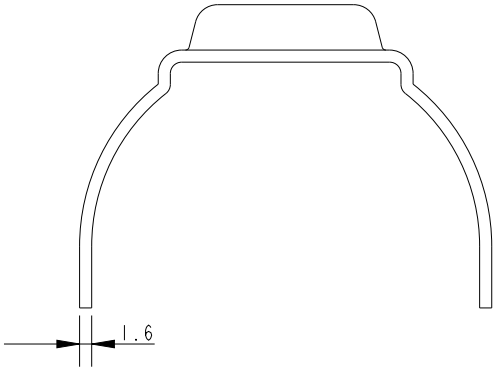

Specification				
Fixing Hole Diameter mm	Spar Size mm	Pin/Head Diameter mm	Strap Thickness kg	Weight g
5.2	50 - 80	-	1.6	38

DIMENSIONS FOR REFERENCE ONLY

allenbrothers.co.uk
+44(0)1621 772477

Title	Description
A4413-REF	Kicking Strap Bracket