All information is copyright of allen ©

SA.873

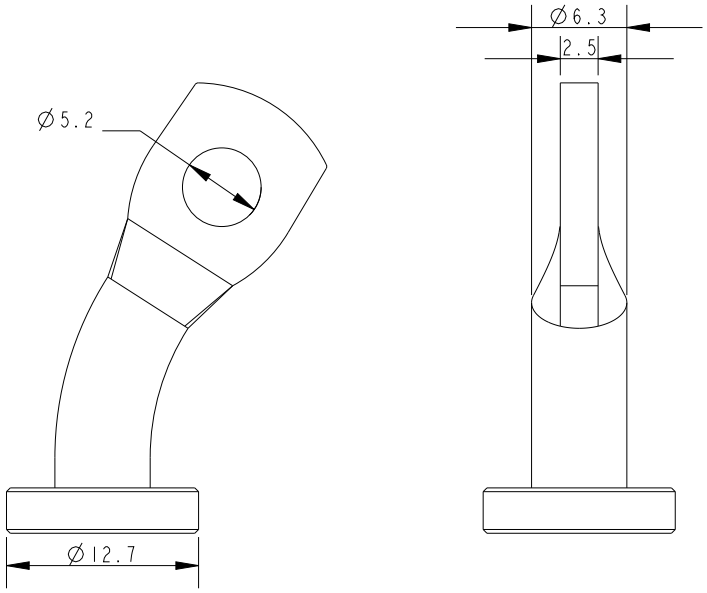

SCALE 2:1

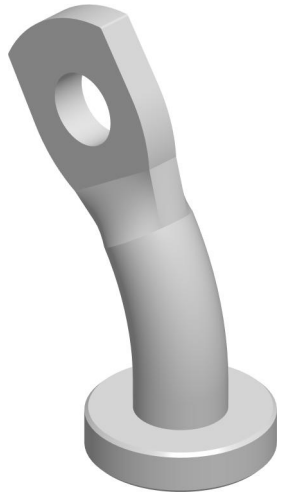

Specification				
Fixing Hole Diameter mm	Spar Size mm	Pin/Head Diameter mm	Strap Thickness kg	Weight g
5.2	6 - 13	-	-	8.8

DIMENSIONS FOR REFERENCE ONLY

allenbrothers.co.uk
+44(0)1621 772477

Title	Description
SA-873-REF	Kicking Strap Key Curved