All information is copyright of allen ©

A5005

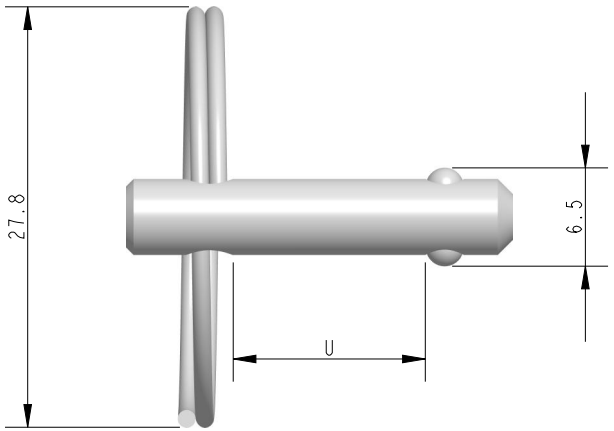

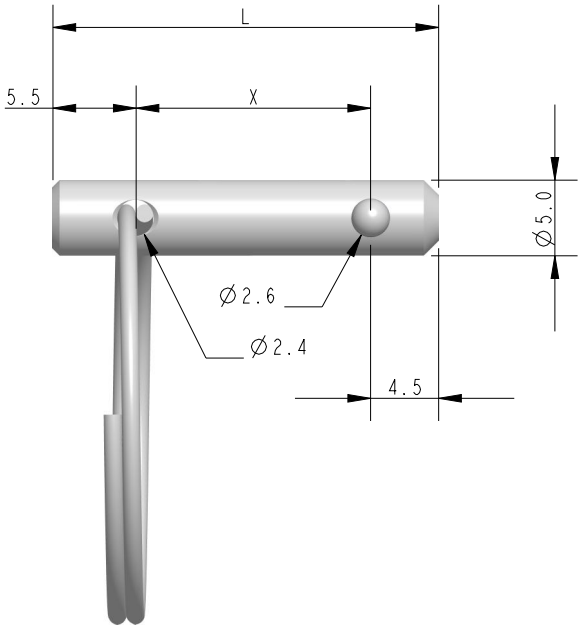

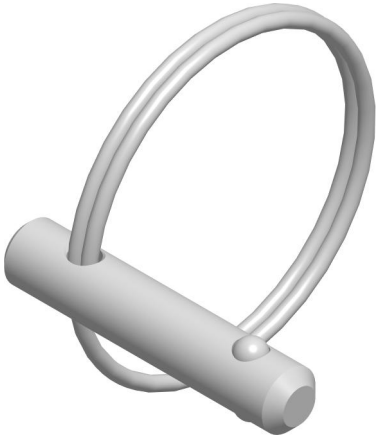

SCALE 2:1

A	'L'	'X'	'U'
A5005-26	25.5	15.5	13
A5005-32	31	21	18.5
A5005-38	37	27	24.5
A5005-44	43	33	30.5
A5005-50	49	39	36.5
A5005-56	55	45	42.5
A5005-62	61	51	48.5
A5005-68	67	57	54.5
A5005-74	73	63	60.5
A5005-80	79	69	66.5
A5005-86	85	75	72.5
A5005-92	91	81	78.5
A5005-98	97	87	84.5
A5005-104	103	93	90.5

Specification			
Dia. mm	Usable Length mm	Overall Length mm	Compatible With
5	U	L	A4272

DIMENSIONS FOR REFERENCE ONLY

allenbrothers.co.uk
+44(0)1621 772477

Title	Description
A5005-REF	5mm Multi-Length Fast Pin