All information is copyright of allen ©

Clevis Pin

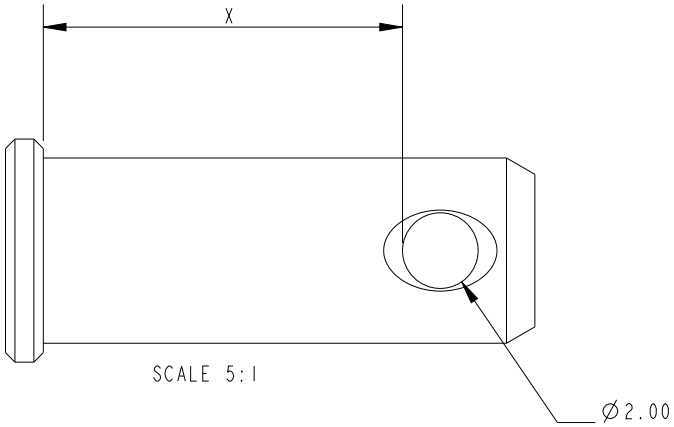

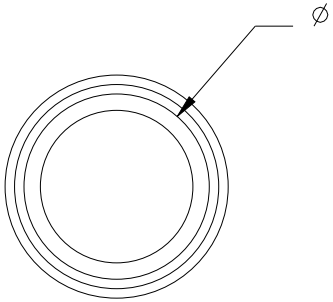

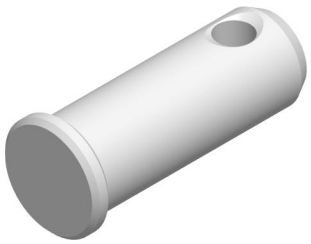

Part No.	Diameter Ø (mm)	Length X (mm)
AFCP59	5	9.5
AFCP512	5	12.5
AFCP515	5	15
AFCP518	5	18.5
AFCP521	5	21.5
AFCP525	5	25
AFCP621	6	21.5

DIMENSIONS FOR REFERENCE ONLY

allenbrothers.co.uk
+44(0)1621 772477

Title	Description
CLEVIS-PIN-REF	CLEVIS PINS