All information is copyright of allen ©

A5405S

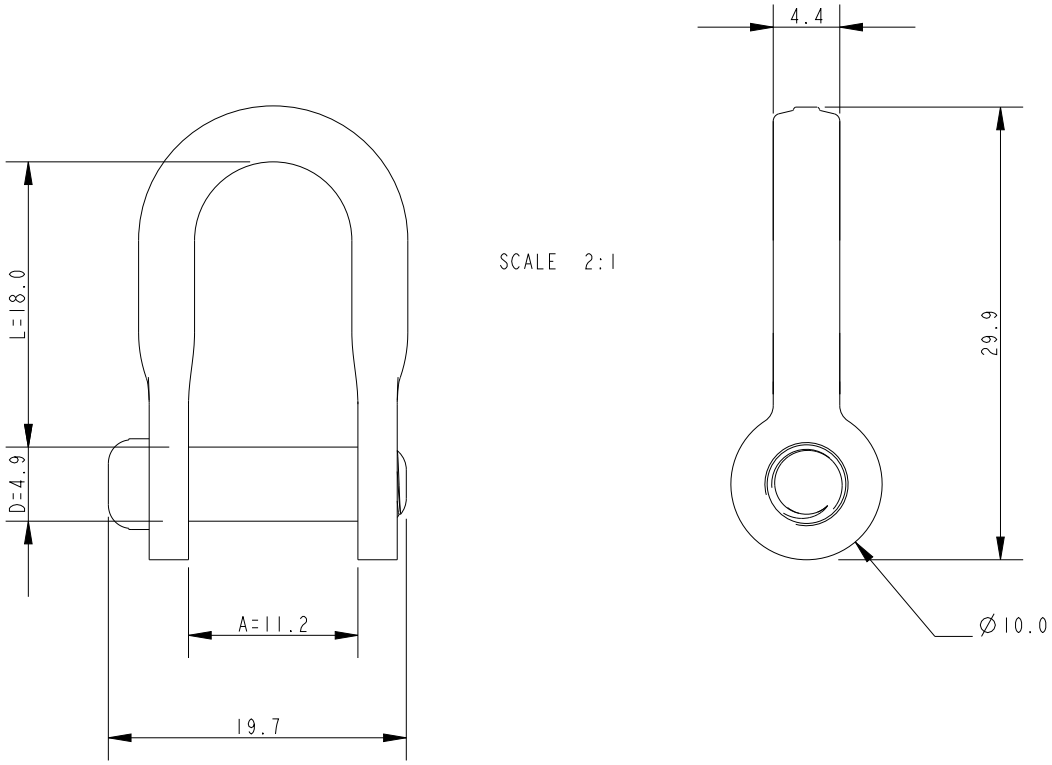

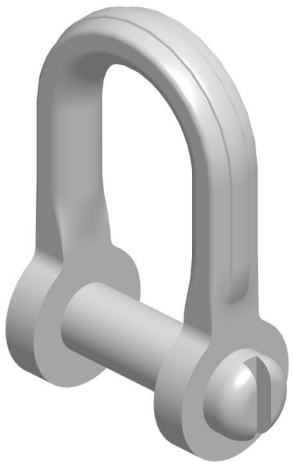

Specification				
L mm	A mm	D mm	Breaking Load kg	Weight g
18	11	5	1250	9

DIMENSIONS FOR REFERENCE ONLY

allenbrothers.co.uk
+44(0)1621 772477

Title	Description
A5405S-REF	D Shackle Small