All information is copyright of allen ©

A5405N

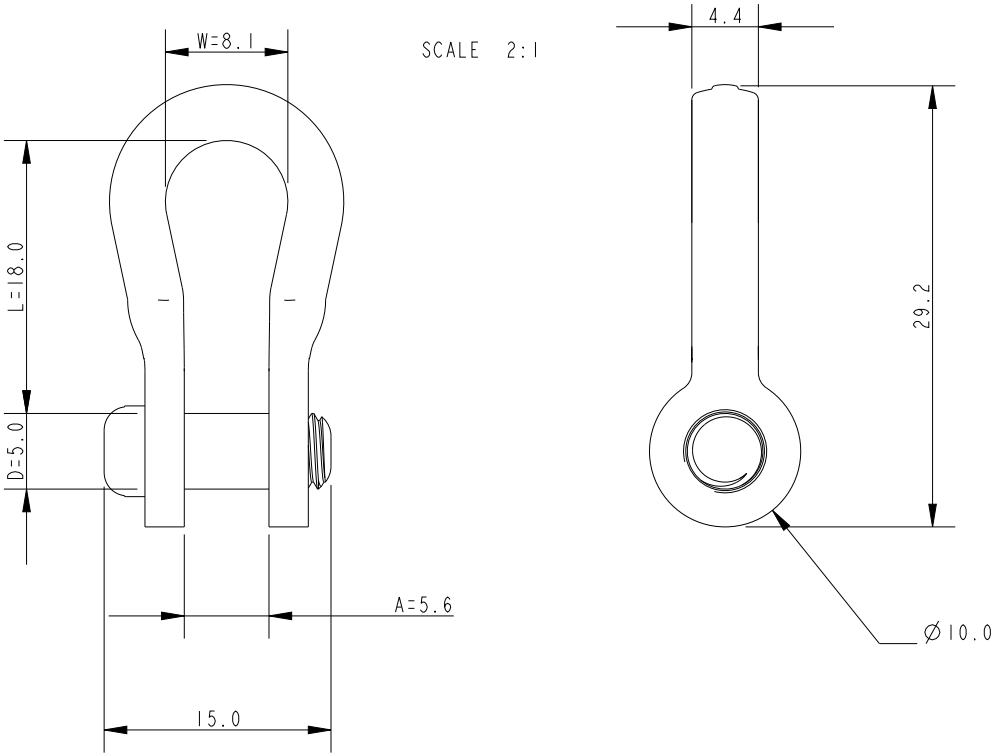

Specification				
L mm	A mm	D mm	W mm	Breaking Load kg
18	6	5	8	1250

DIMENSIONS FOR REFERENCE ONLY

allenbrothers.co.uk
+44(0)1621 772477

Title	Description
A5405N-REF	D Shackle Narrow