All information is copyright of allen ©

A4028

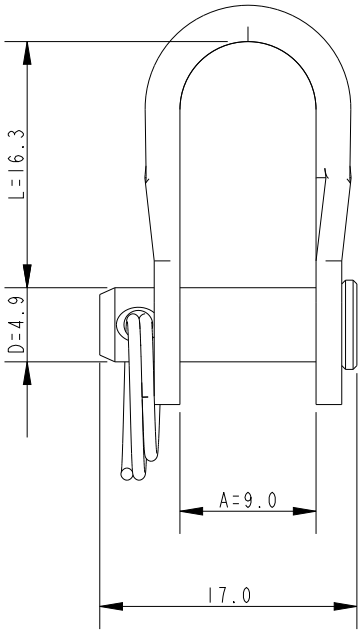

SCALE 2:1

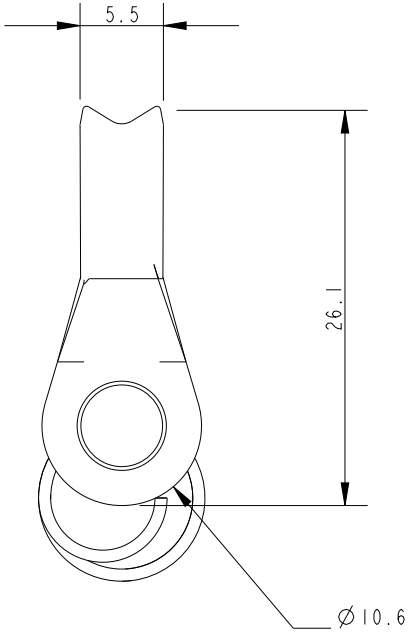

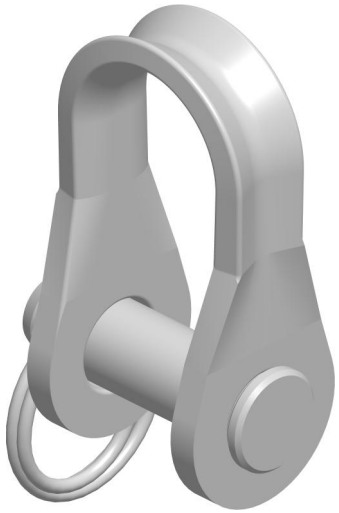

SCALE 5:2

Specification					
L mm	A mm	D mm	Breaking Load kg	Max. Working Load kg	Weight g
16	9	4.9	900	300	7

DIMENSIONS FOR REFERENCE ONLY

allenbrothers.co.uk
+44(0)1621 772477

Title	Description
A4028-REF	Pressed Rigging Link Narrow