All information is copyright of allen ©

A6040

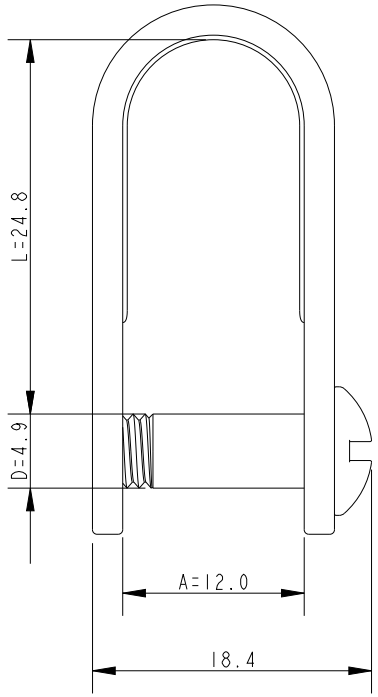

SCALE 2:1

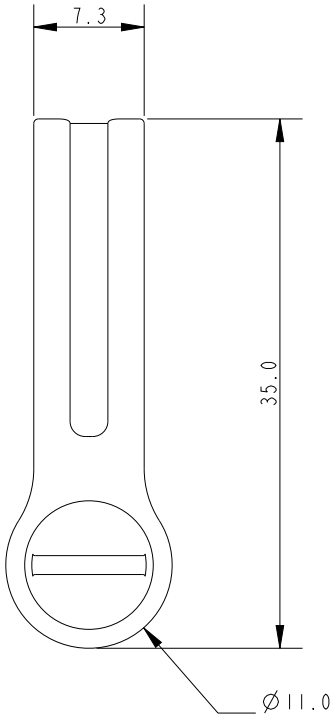

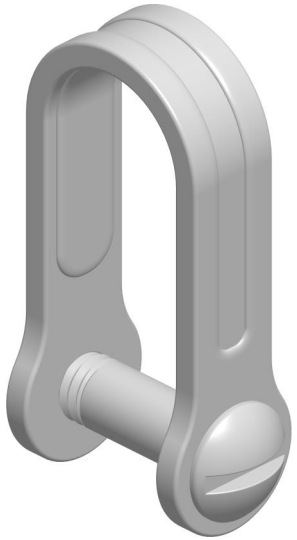

Specification				
L mm	A mm	D mm	Breaking Load kg	Weight g
25	12	5	1200	11

DIMENSIONS FOR REFERENCE ONLY

allenbrothers.co.uk
+44(0)1621 772477

Title	Description
A6040-REF	D Shackle With Slotted Pin