All information is copyright of allen ©

A4317

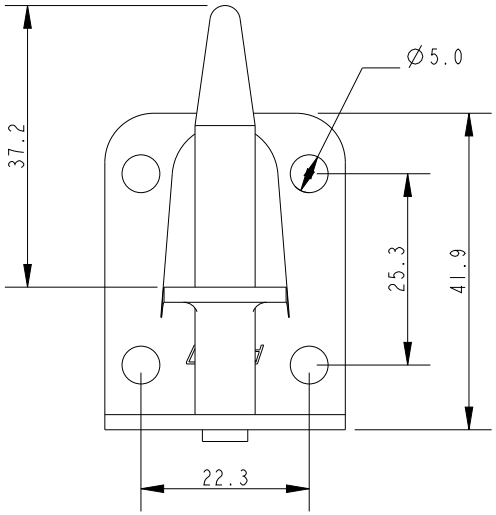

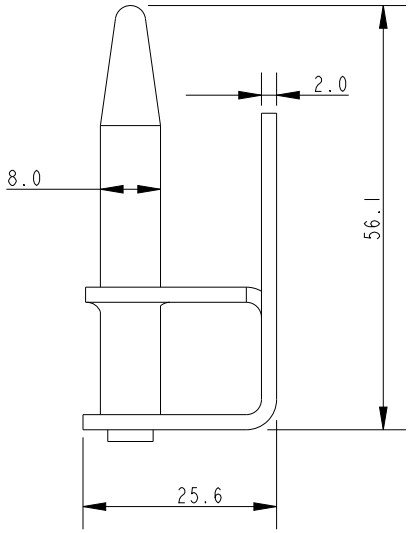

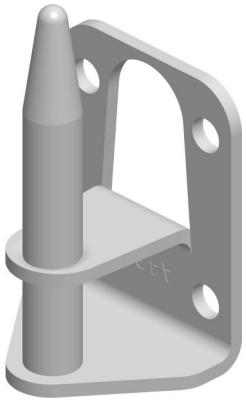

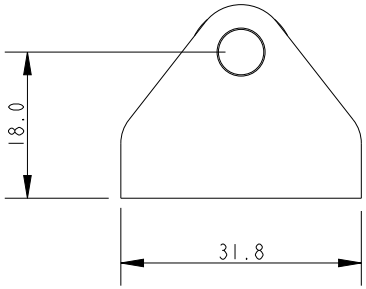

SCALE 1:1

DIMENSIONS FOR REFERENCE ONLY

allenbrothers.co.uk
+44(0)1621 772477

Specification					
Fixing Hole Dia mm	Overall Width mm	Hole/Pin Dia mm	Pin Length mm	Transom To Pin Centre mm	Weight g
5	32	8	37	18	40

Title	Description
A4317-REF	Transom Pintle