All information is copyright of allen ©

A882525

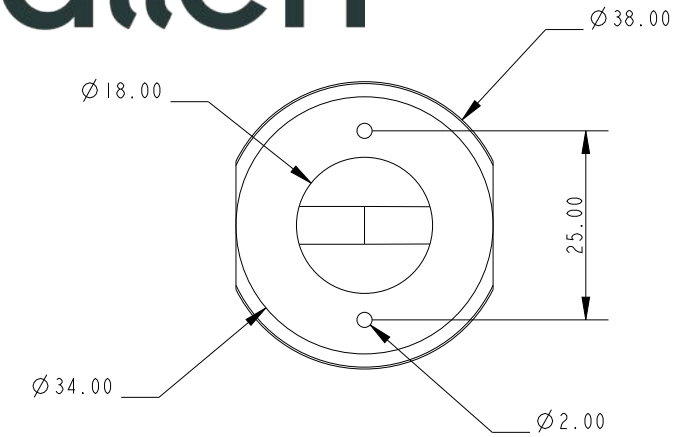

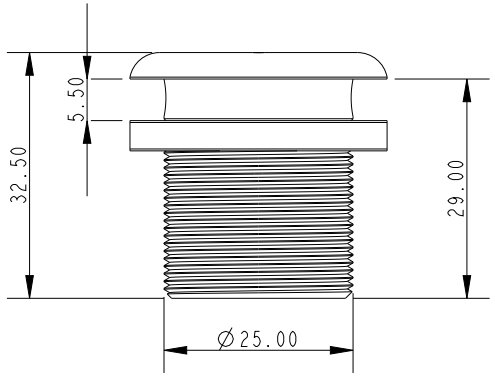

SCALE 1:1

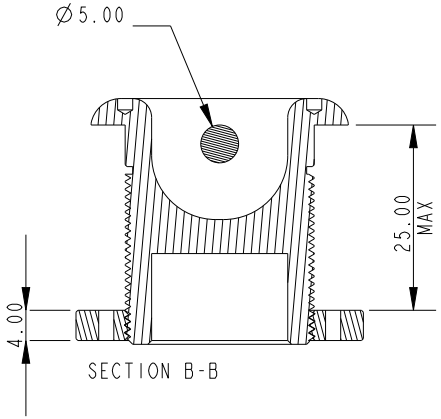

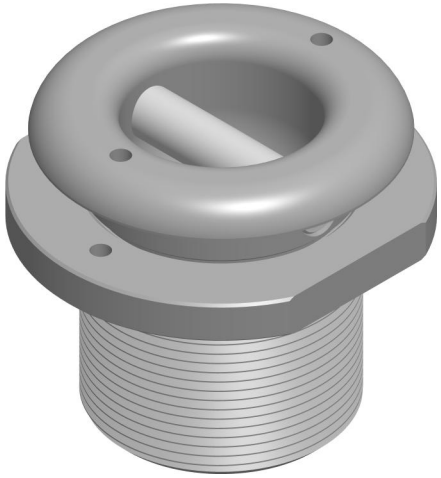

SCALE 3:2

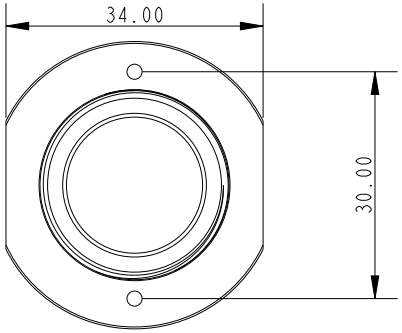

Specification				
Length mm	Line Diameter mm	Breaking Load kg	MWL kg	Weight g
33	5	1400	700	35.9

DIMENSIONS FOR REFERENCE ONLY

allenbrothers.co.uk
+44(0)1621 772477

Title	Description
A882525-REF	Large Fixed Pin Pad Tii