All information is copyright of allen ©

A4871X

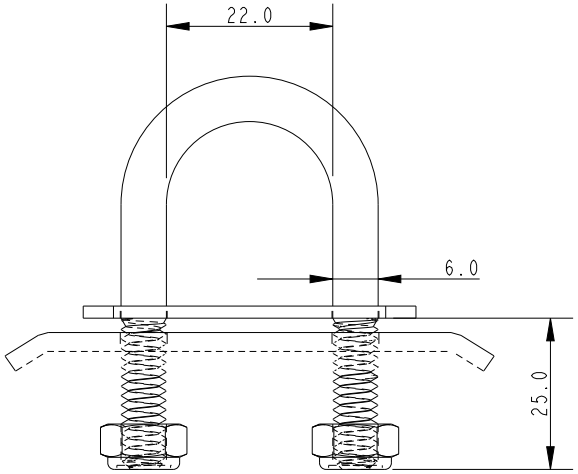

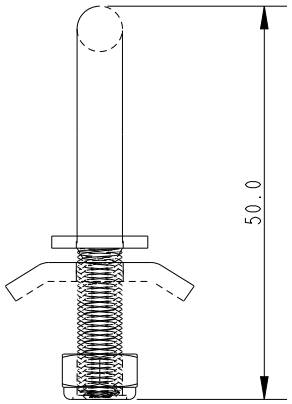

SCALE 1:1

SCALE 3:2

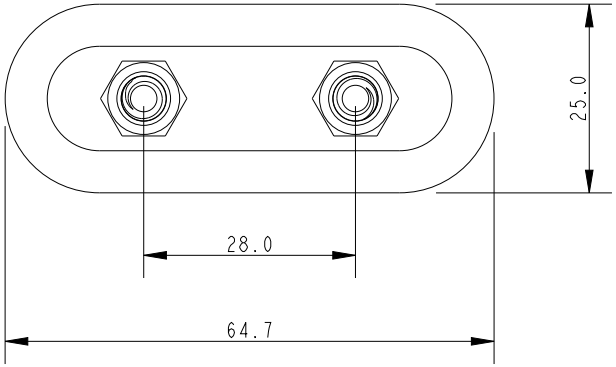

Specification					
Rod Size mm	Fixing Hole Centre mm	Height mm	Thread Length kg	Weight g	Inside Dia. mm
6	28	50	25	62	22

DIMENSIONS FOR REFERENCE ONLY

allenbrothers.co.uk
+44(0)1621 772477

Title	Description
A4871X-REF	U Bolt With Heavy Duty Top & Bottom Backing Plate