All information is copyright of allen ©

A.123

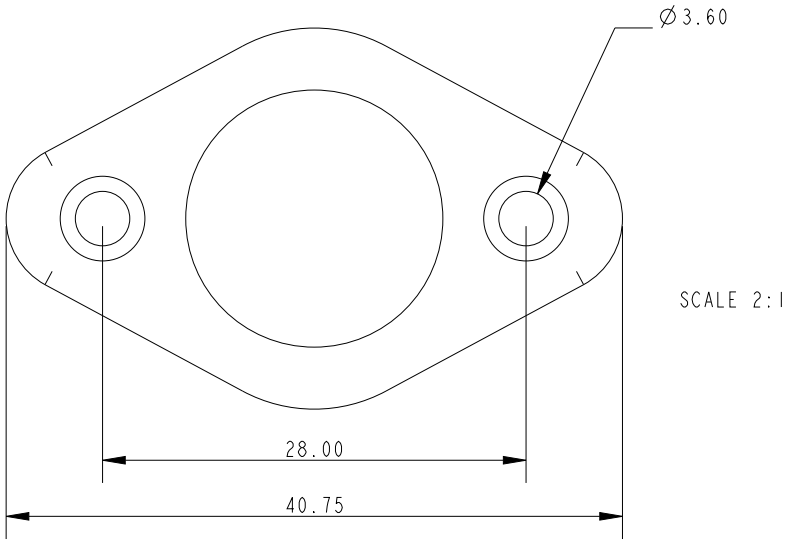

SCALE 2:1

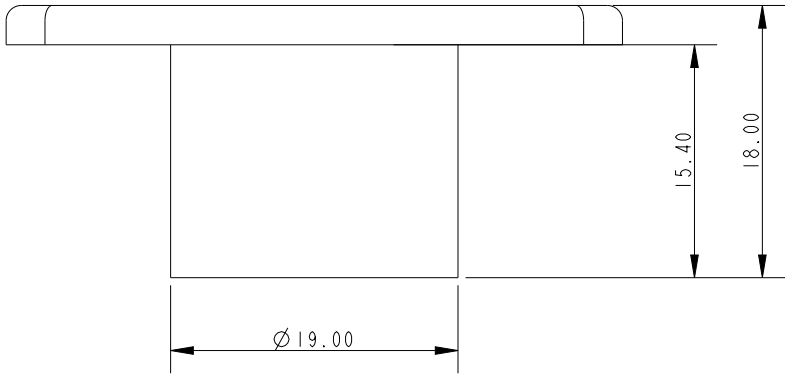

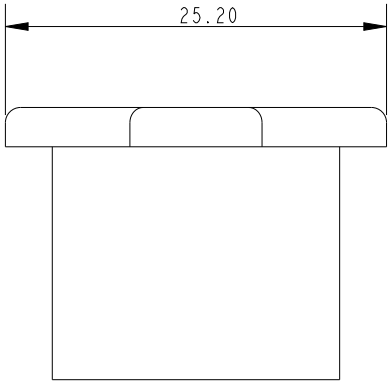

Specification					
Fixing Hole Size mm	Fixing Hole Centres mm	Outside Diameter mm	Inside Diameter mm	Weight g	Material
3	28	19	17	3	Nylon

DIMENSIONS FOR REFERENCE ONLY

allenbrothers.co.uk
+44(0)1621 772477

Title	Description
A-123-REF	Drain Socket