All information is copyright of allen ©

A.155

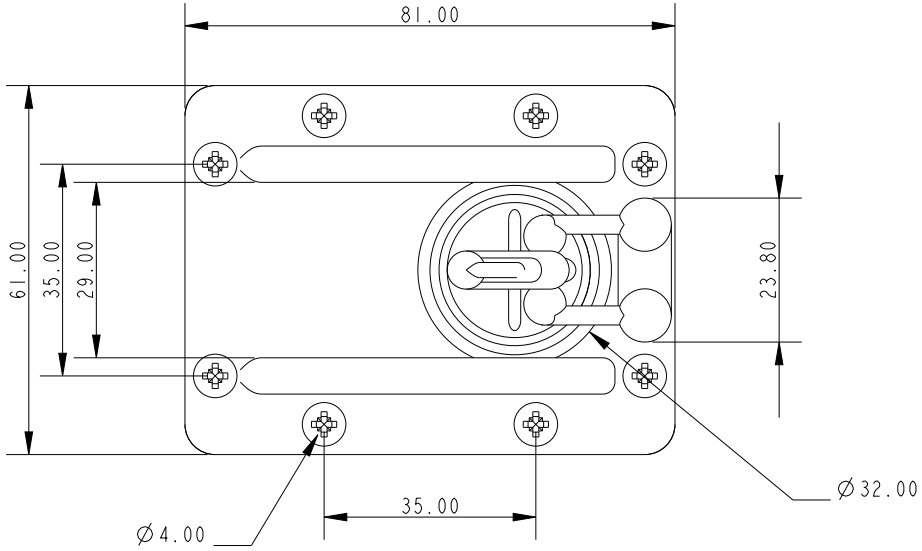

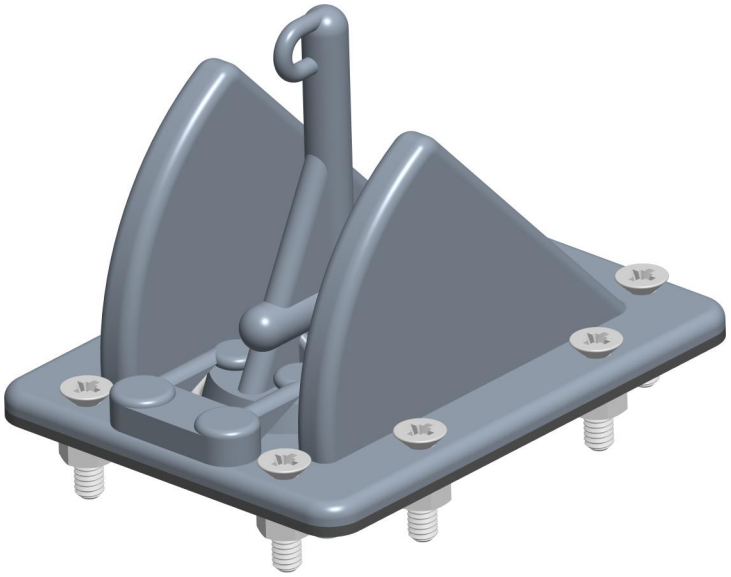

SCALE 1:1

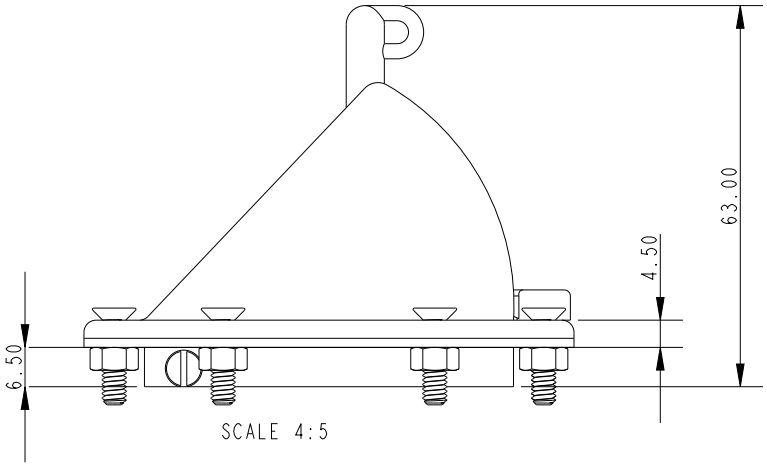

SCALE 4:5

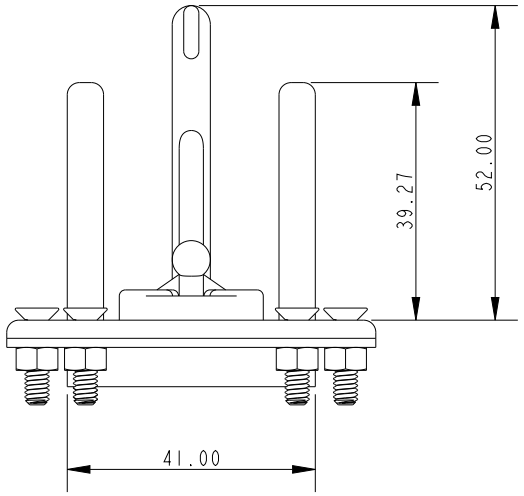

Weight - 77g

DIMENSIONS FOR REFERENCE ONLY

allenbrothers.co.uk
+44(0)1621 772477

Title	Description
A-155-REF	Self Bailer with No Guard