All information is copyright of allen ©

A.223

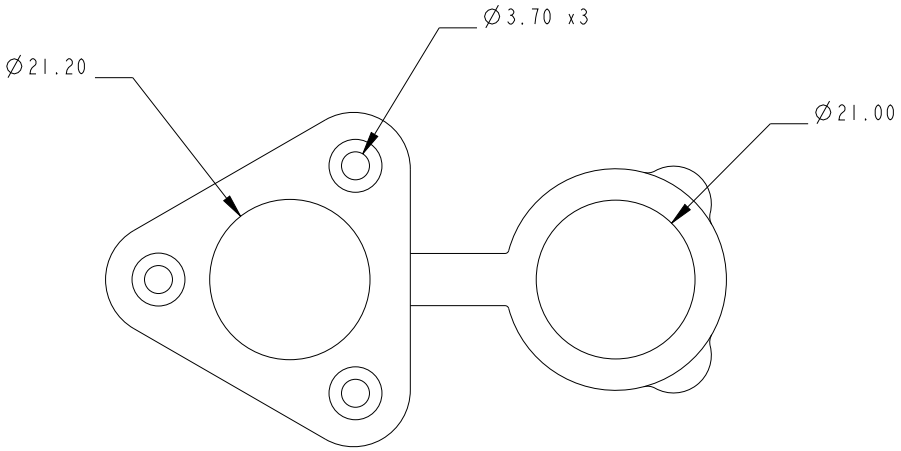

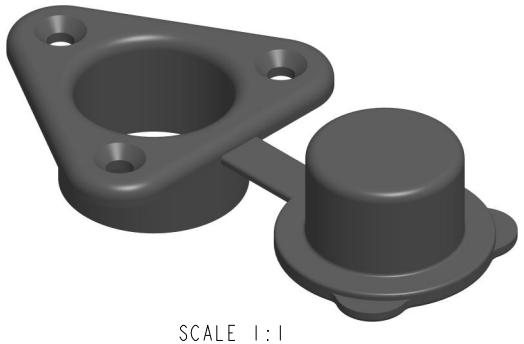

SCALE 1:1

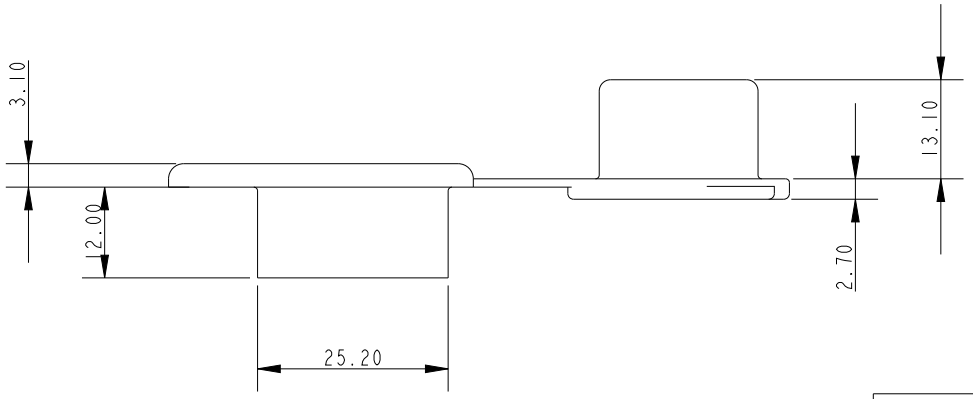

Specification				
Fixing Hole Size mm	Fixing Hole Centres mm	Outside Diameter mm	Weight g	Material
3	30 x 30 x 30	25.2	7	Nylon

DIMENSIONS FOR REFERENCE ONLY

allenbrothers.co.uk
+44(0)1621 772477

Title	Description
A-223-REF	Drain Socket With Captive Bung