All information is copyright of allen ©

A.423

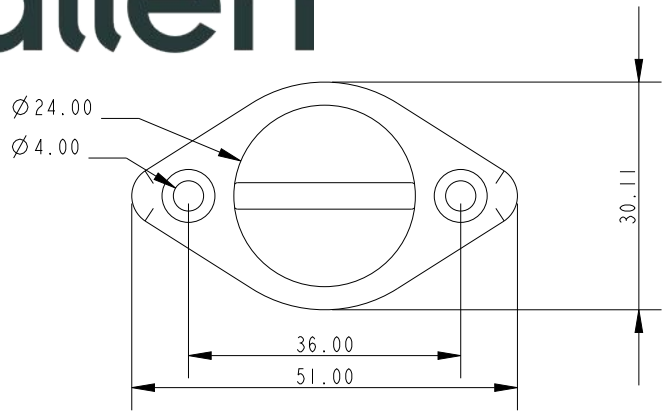

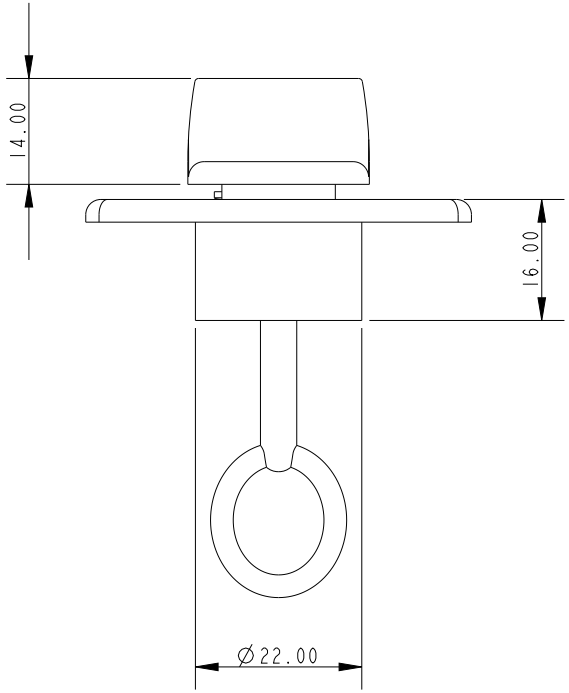

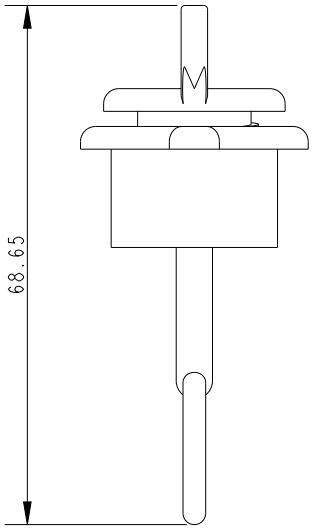

Specification					
Fixing Hole Size mm	Fixing hole centres mm	Outside Diameter mm	Inside Diameter mm	Weight g	Material
4	36	22	17	22	Nylon

DIMENSIONS FOR REFERENCE ONLY

allenbrothers.co.uk
+44(0)1621 772477

Title	Description
A-423-REF	Drain Socket with Screw Bung