All information is copyright of allen ©

A.424

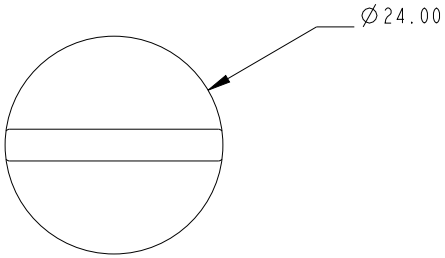

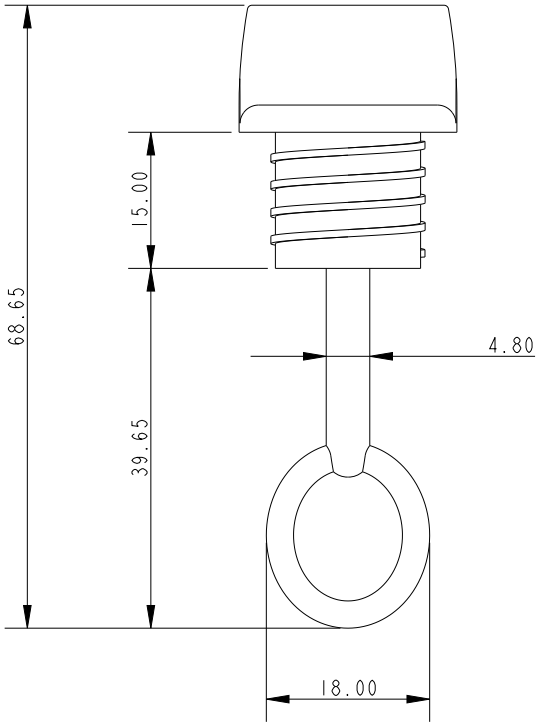

SCALE 6:5

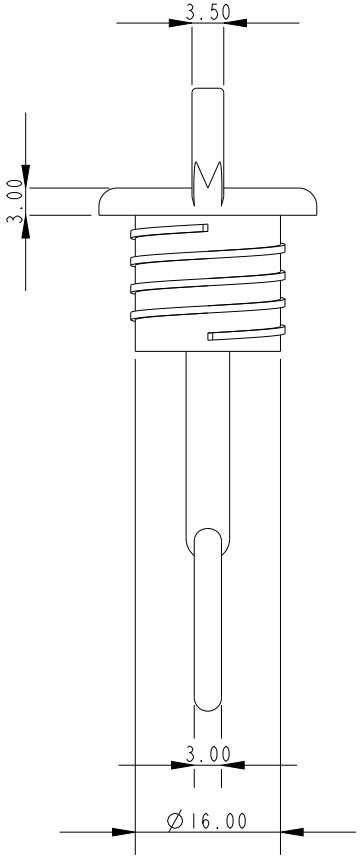

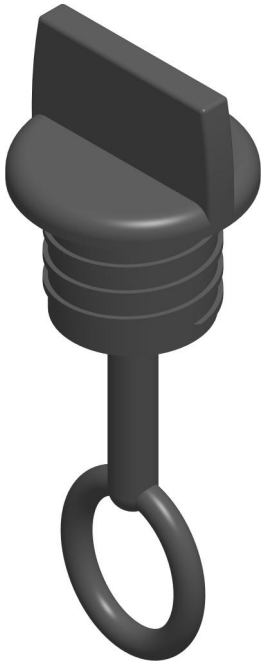

SCALE 7:5

Specification		
Material	Outside Diameter mm	Weight g
Nylon	16	7.1

DIMENSIONS FOR REFERENCE ONLY

allenbrothers.co.uk
+44(0)1621 772477

Title	Description
A-424-REF	Replacement Screw Bung for A.423