All information is copyright of allen ©

A4155

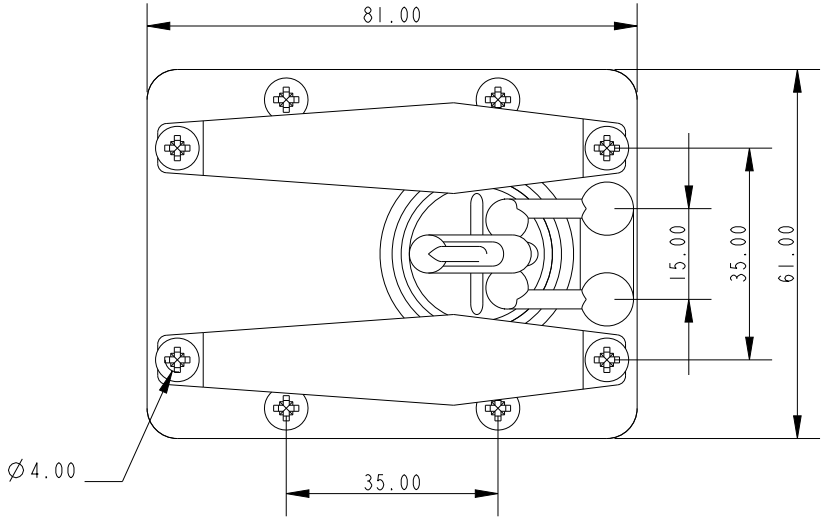

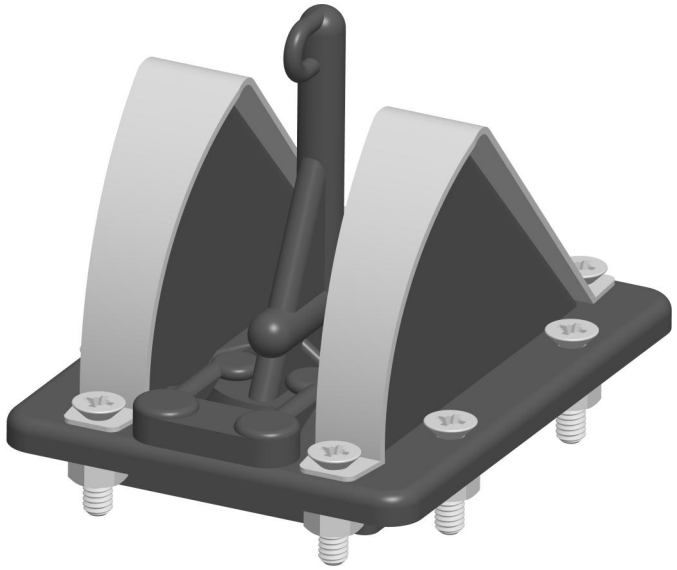

SCALE 1:1

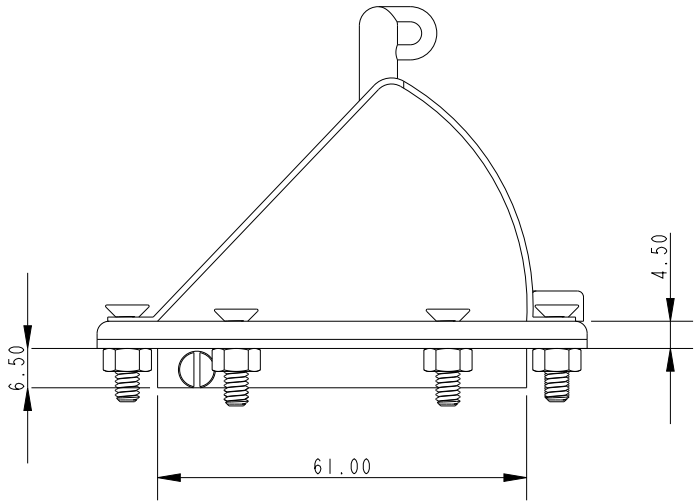

SCALE 4:5

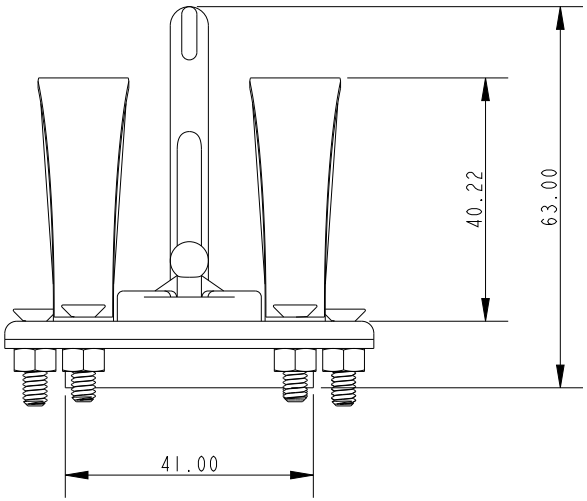

Weight - 81g

DIMENSIONS FOR REFERENCE ONLY

allenbrothers.co.uk
+44(0)1621 772477

Title	Description
A4155-REF	Self Bailer with SS Guard