All information is copyright of allen ©

A4255

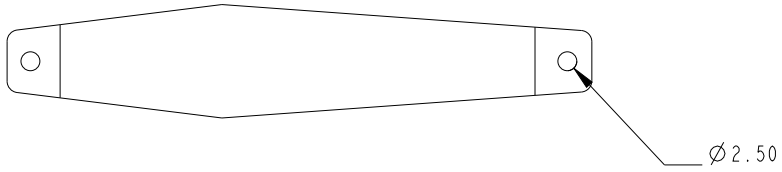

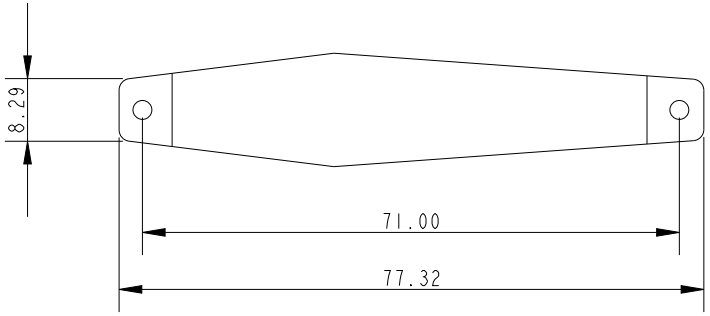

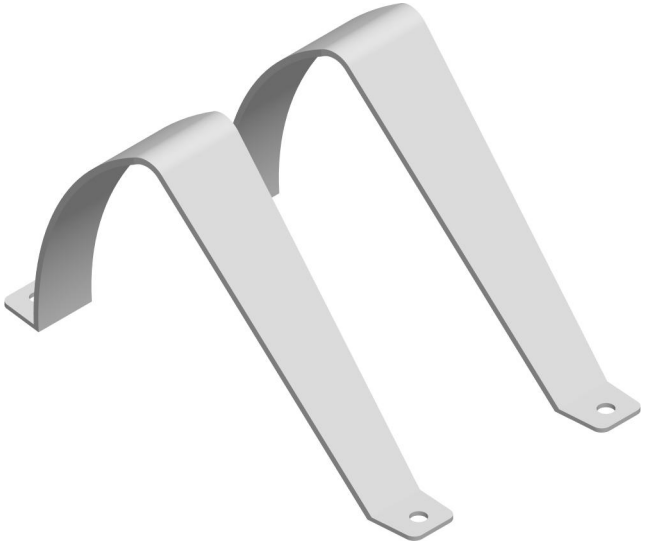

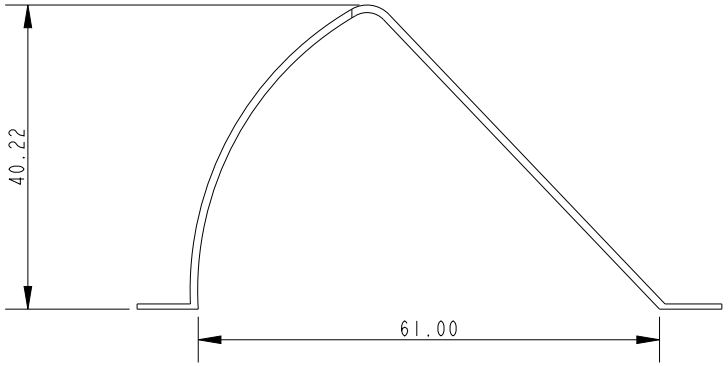

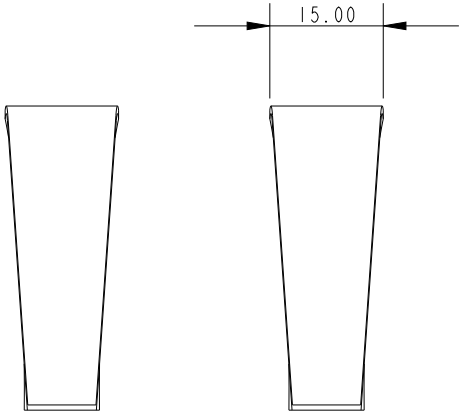

Weight - 35.7g

DIMENSIONS FOR REFERENCE ONLY

allenbrothers.co.uk
+44(0)1621 772477

Title	Description
A4255-REF	Self Bailer Guard