All information is copyright of allen ©

52802

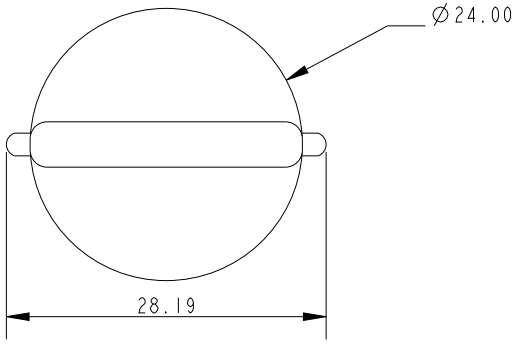

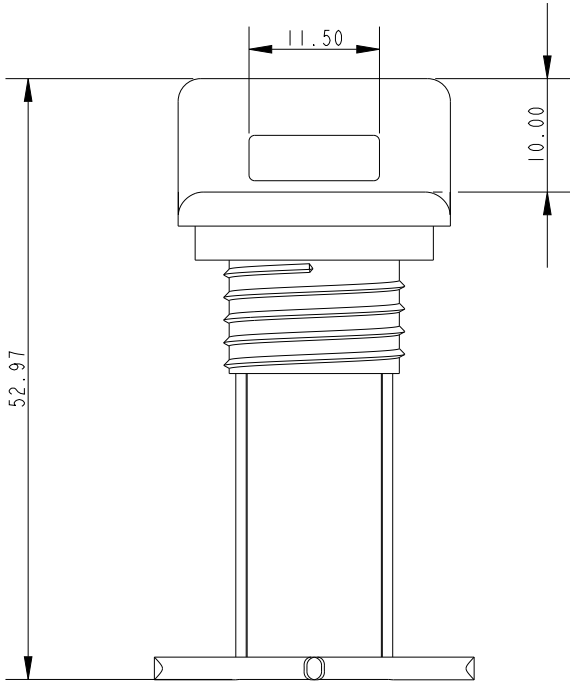

SCALE 3:2

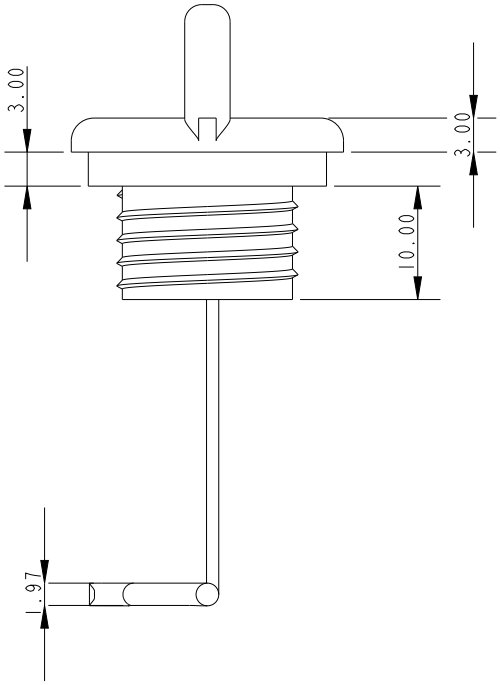

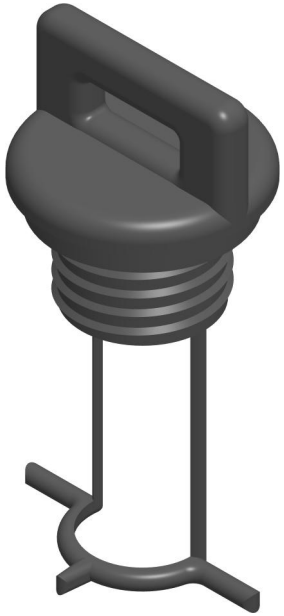

SCALE 3:2

Specification	
Material	Weight g
Nylon	4

DIMENSIONS FOR REFERENCE ONLY

allenbrothers.co.uk
+44(0)1621 772477

Title	Description
52802-REF	Plastic Bung No Socket