All information is copyright of allen ©

A.539-14

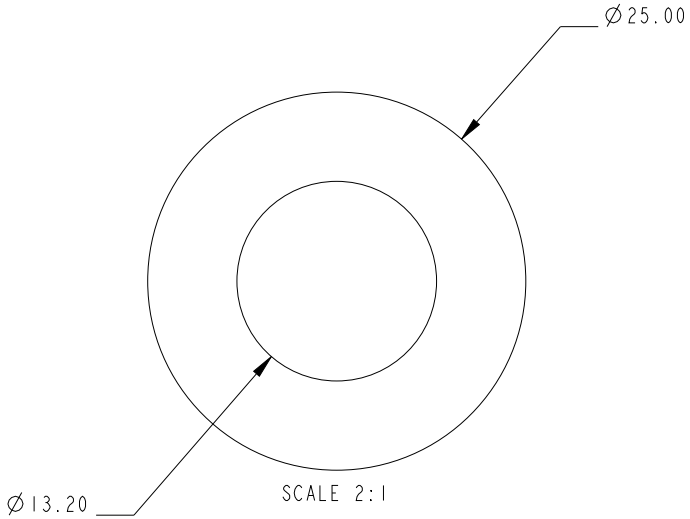

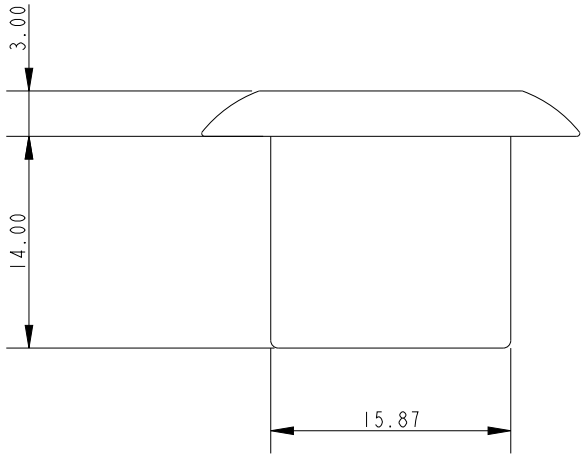

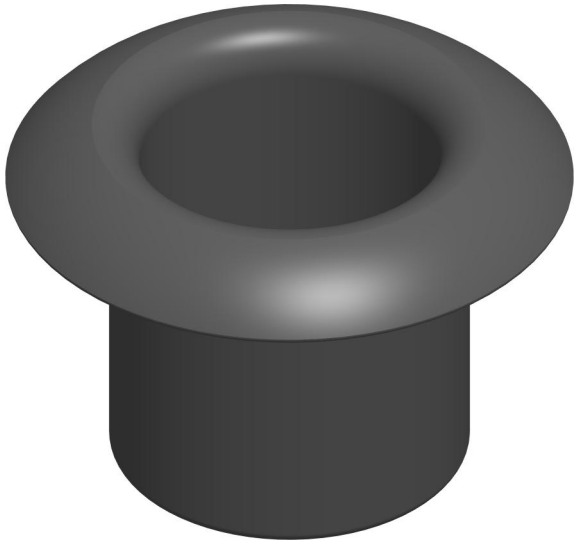

Specification			
Inside Diameter mm	Outside Diameter mm	Column Depth mm	Weight g
13	16	14	2

DIMENSIONS FOR REFERENCE ONLY

allenbrothers.co.uk
+44(0)1621 772477

Title	Description
A-539-14-REF	A-539-14