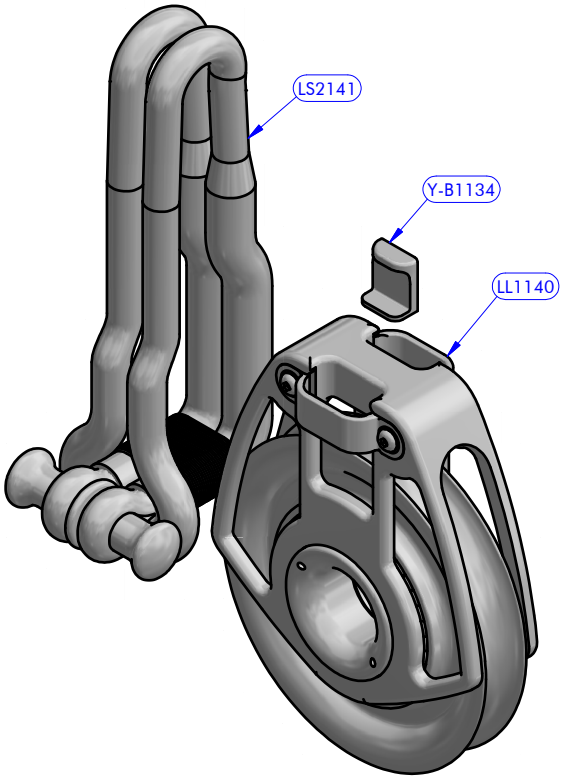

LL1140

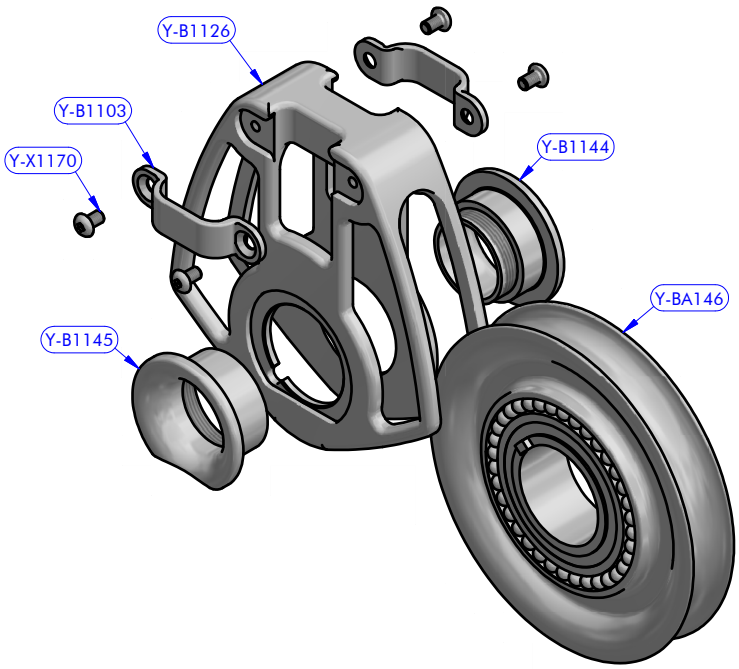

PART LIST			
CODE	DESCRIPTION	MATERIAL	Q.TY
LL1140	Simple	Various	1
Y-B1134	Spacer	Plastic	1
LS2141	Dyneema	Various	1

PART LIST LL1140			
CODE	DESCRIPTION	MATERIAL	Q.TY
Y-B1103	Spacer	Plastic	2
Y-B1126	Cheekplate	Aluminium	1
Y-B1144	Cap	S.Steel	1
Y-B1145	Cap	S.Steel	1
Y-BA146	Sheave	Aluminium	1
Y-X1170	Screw	S.Steel	4

antal	Looper series (FAMILY)	Simple (ARTICLE)	LS1140 (MODEL CODE)	24/03/2020 (DATE)	00 (REV.)
	Exploded view (DESCRIPTION)			20032414 (DWG N.)	/ (PG.)