7206

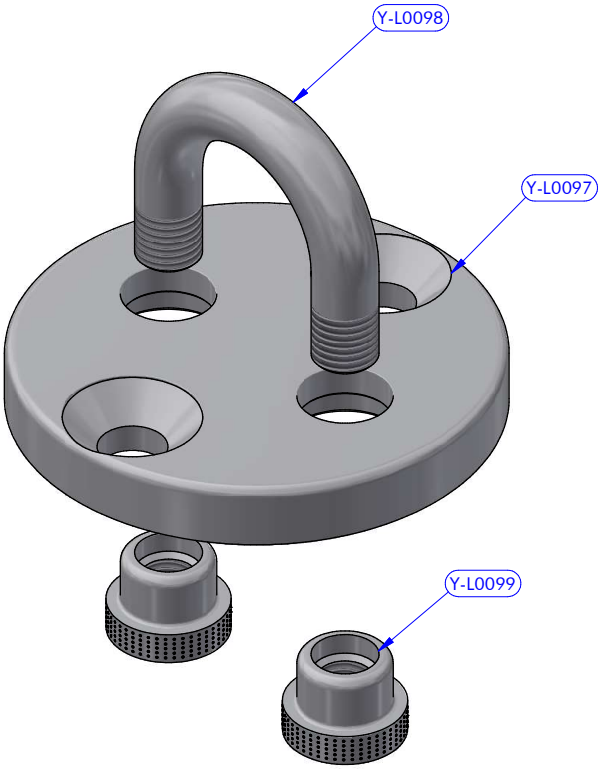

PART LIST 7206			
CODE	DESCRIPTION	MATERIAL	Q.TY
Y-L0097	Base	S.Steel	1
Y-L0098	U-bolt	S.Steel	1
Y-L0099	Pipe centering bushing	S.Steel	2

antal	Size 6 A4	7206	10/10/2022	02
	DESCRIPTION	MODEL CODE	DATE	REV.
			18113005	1 / 1
			DWG N.	PG.