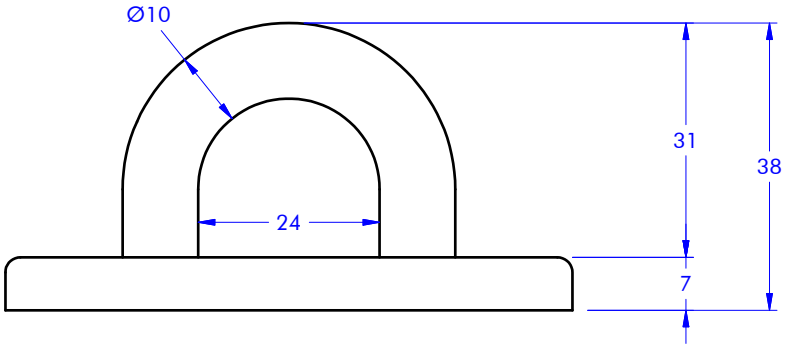

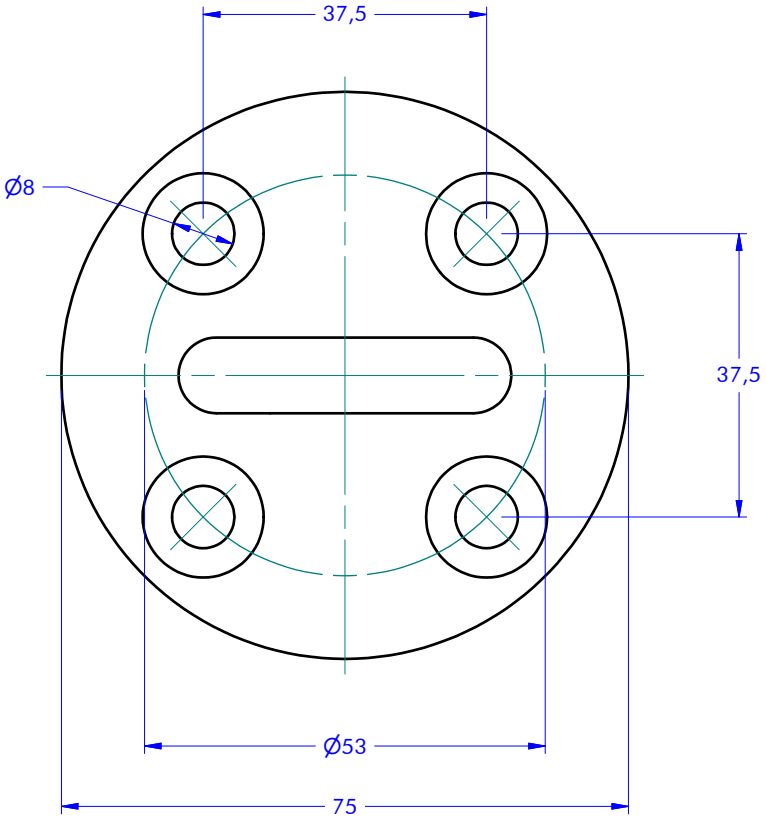

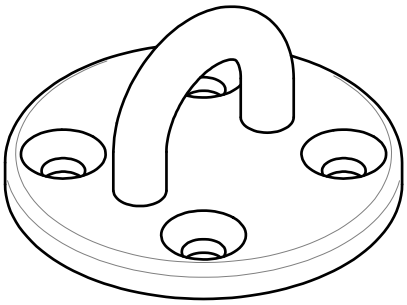

antal	Accessories CATEGORY	4 Screws Pad-Eye FAMILY	**7210** MODEL CODE	2500 kg SWL	0.26 kg WEIGHT
	Pad-Eye ARTICLE			07/11/2017 DATE	1 : 1 SCALE

www.antal.it - antal@antal.it