7210

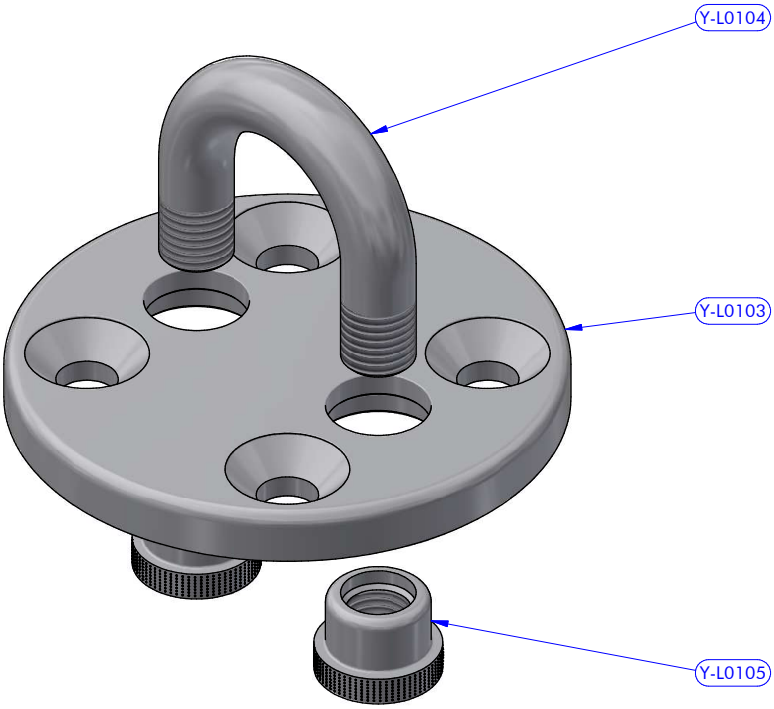

PART LIST 7210			
CODE	DESCRIPTION	MATERIAL	Q.TY
Y-L0103	Base	S.Steel	1
Y-L0104	U-bolt	S.Steel	1
Y-L0105	Pipe centering bushing	S.Steel	2

antal	Size 10 A4	7210	10/10/2022	01
	DESCRIPTION	MODEL CODE	DATE	REV.
			18120311	1 / 1
			DWG N.	PG.