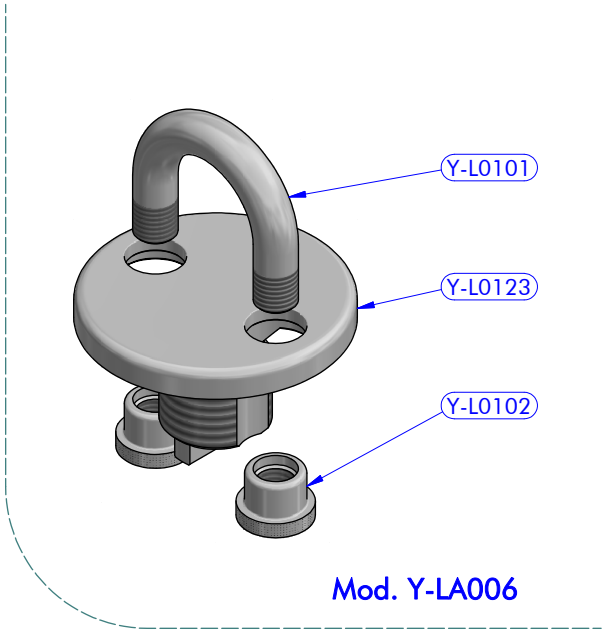

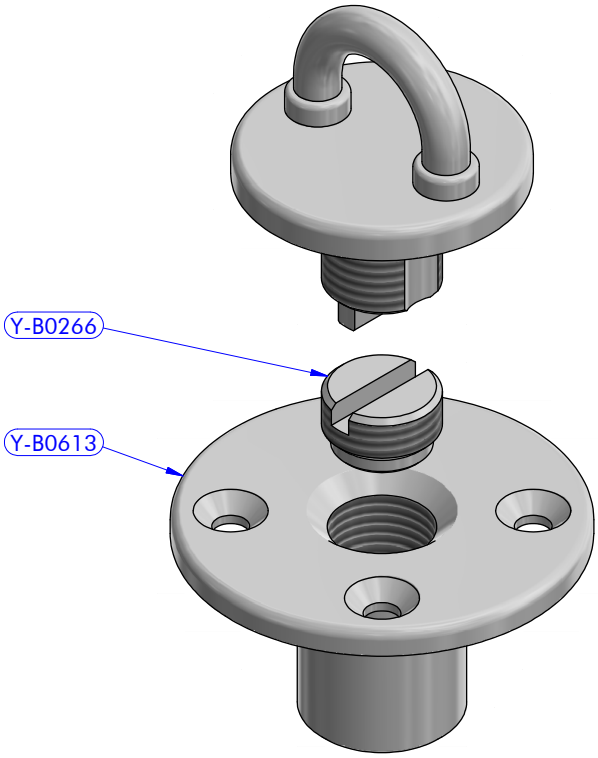

PART LIST			
CODE	DESCRIPTION	MATERIAL	Q.TY
Y-B0266	Cap	Mekton	1
Y-B0613	Deck base	S.Steel	1
Y-L0101	U-bolt	S.Steel	1
Y-L0102	Nut	S.Steel	2
Y-L0123	Upper base	S.Steel	1

antal	Screwed eyebolts FAMILY	Screwed eyebolt ARTICLE	7308 MODEL CODE	12/12/2018 DATE	02 REV.
	Exploded view DESCRIPTION			18120710 DWG N.	1 / 1 PG.