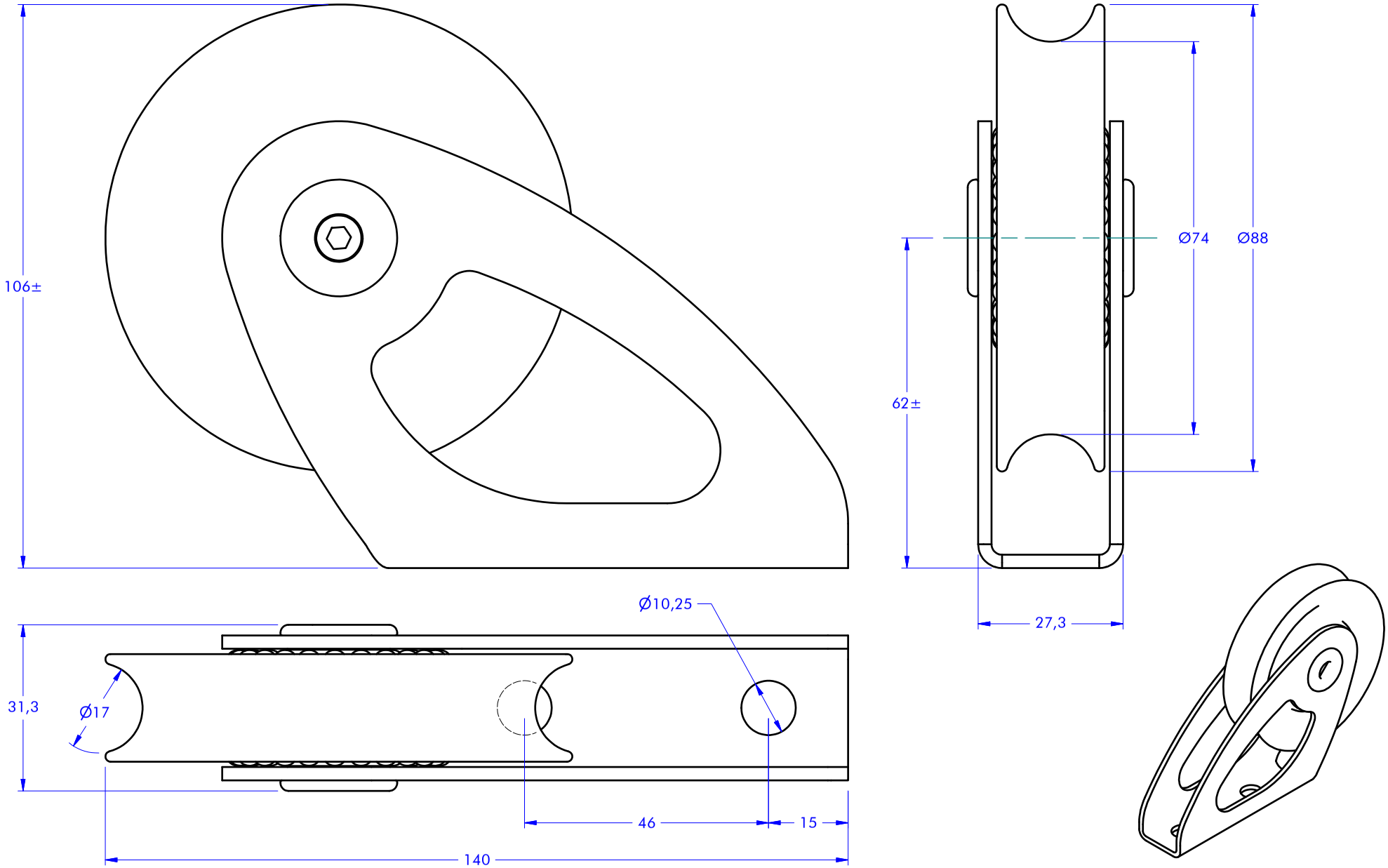


| | | | | | |
|---|---|---|---|---|---|
| antal | Blocks (CATEGORY) | Halyard block (FAMILY) | 815.090 (MODEL CODE) | 2.500 kg (SWL) | 0.39 kg (WEIGHT) |
| | Size 90 (ARTICLE) | | | 11/01/2018 (DATE) | 1 : 1 (SCALE) |

**www.antal.it** - antal@antal.it