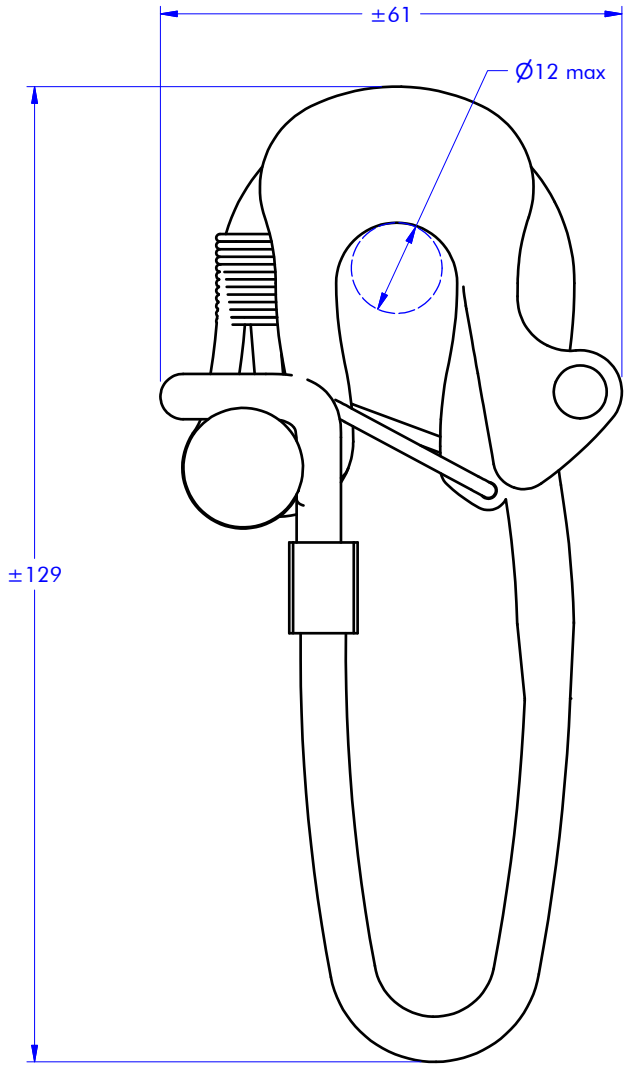

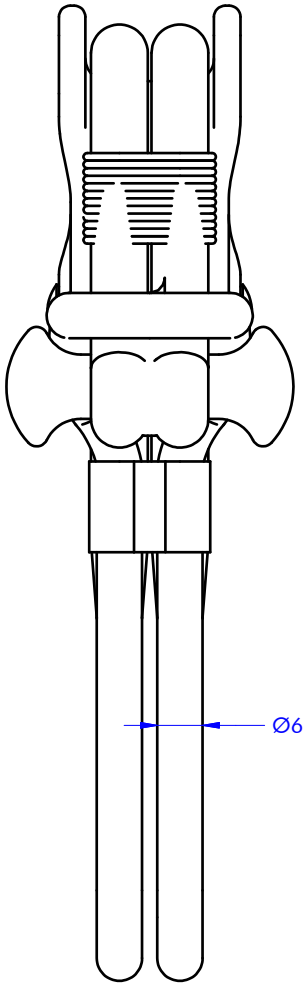

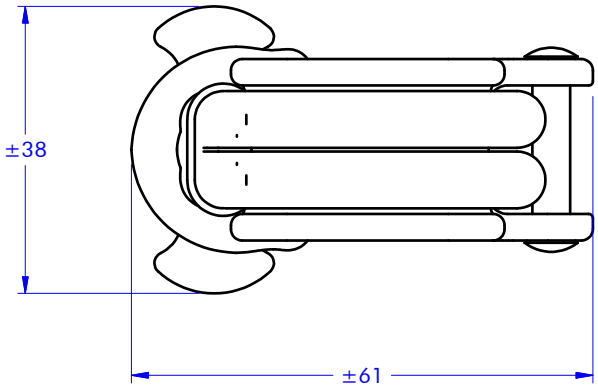

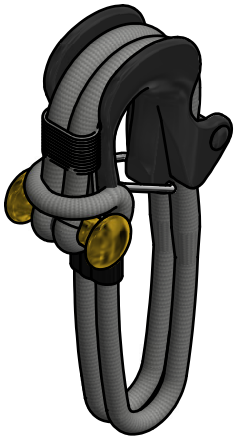

antal	Soft Link (CATEGORY)	Hook (FAMILY)	HK12 (MODEL CODE)	1500 kg (SWL)	80 gr (WEIGHT)
	Hook (ARTICLE)			08/01/2020 (DATE)	1 : 1 (SCALE)

www.antal.it - antal@antal.it